Display Case • Accessory Box • Detail Carving • Cookbook Rack • Half-blind Dovetails

Woodsmith®

Vol. 18 / No. 107

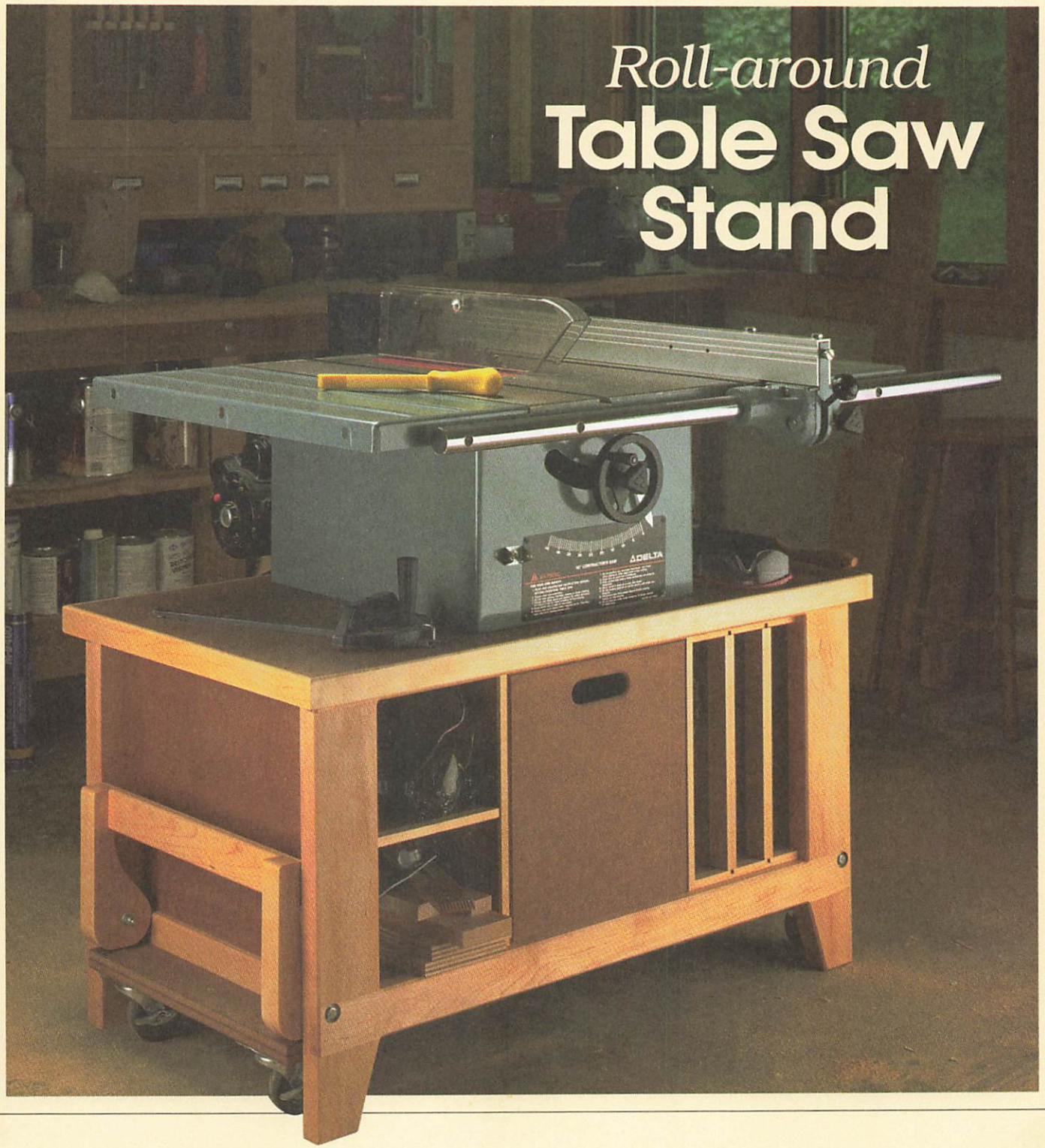

Roll-around Table Saw Stand

Woodsmith

No. 107 October, 1996

Publisher Donald B. Peschke
Editor Terry J. Strohman
Associate Editor Jon Garbison
Assistant Editor Vincent Ancona
Art Director Todd Lambirth
Senior Illustrators David Kreyling, Dirk Ver Steeg
Graphic Designer Mike Mittermeier

CREATIVE RESOURCES

Creative Director: Ted Kralicek • *Project Developer:* Ken Munkel • *Project Designer:* Ted Wong, Jr. • *Shop Manager:* Steve Curtis • *Shop Craftsman:* Steve Johnson • *Photography Director:* Lark Gilmer • *Senior Photographer:* Crayola England

BOOKS

Executive Editor: Douglas L. Hicks • *Art Director:* Linda Vermie • *Senior Graphic Designer:* Chris Glowacki

CIRCULATION

Circulation Director: Susan Du Bois • *Subscription Manager:* Sandy Baum • *Renewal Manager:* Paige Rogers • *Assistant Direct Mail Mgr.:* Julie Greenlee • *Assistant Subscription Mgr.:* Joy Krause • *Associate Graphic Design Director:* Susie Rider • *Sr. Graphic Designer:* Cheryl L. Simpson

CORPORATE SERVICES

Vice President of Planning and Finance: Jon Macarthy • *Controller:* Robin Hutchinson • *Sr. Account.:* Laura Thomas • *Accts. Payable:* Mary J. Schultz • *Production Dir.:* George Chmielarz • *Electronic Publishing:* Douglas M. Lidster • *Production Artist:* Jon Snyder • *Electronic Communications Coord.:* Gordon C. Gaippe • *Network Administator:* Al Barnes • *Prof. Development Dir.:* Joyce Moore • *H.R. Assistant:* Kirstin Koele • *Admin. Assistant:* Julia Fish • *Receptionists:* Jeanne Johnson, Sheryl Ribbey • *Building Maint.:* Ken Griffith

WOODSMITH MAIL ORDER

Operations Director: Bob Baker • *Art Dir.:* Cindy Scarpino • *Materials Manager:* Mark Mattiussi • *Customer Service Mgr.:* Jennie Enos • *Nat. Sales Manager:* Kent A. Buckton • *Warehouse Supr.:* Nancy Johnson • *Buyer:* Linda Jones • *Systems Operator:* Tammy Aldini • *Team Leader:* Karla Eslinger • *Tech. Support:* Dave Stone • *Cust. Serv. Reps.:* Jennifer Murphy, Anna Cox, Kristi Andrews, Margo Petrus • *Warehouse:* Chuck Carlson, Sylvia Carey, Larry Prine, Scott Gilliam, Cathy Steiner

WOODSMITH STORE

Manager: Dave Larson • *Assistant Manager:* Paul Schneider • *Sales Staff:* Pat Lowry, Jerome Herr • *Office Manager:* Vicki Edwards

Woodsmith® (ISSN 0164-4114) is published bimonthly (Feb., Apr., June, Aug., Oct., Dec.) by August Home Publishing Company, 2200 Grand, Des Moines, IA 50312.

Woodsmith® is a registered trademark of August Home Publishing.
Copyright© 1996 August Home Publishing Company. All rights reserved.

Subscriptions: Single copy: $4.99. One year subscription (6 issues), $24.95. (Canada/Foreign add $5 per year, U.S. funds.)
Periodicals Postage Paid at Des Moines, IA and at additional offices.
Postmaster: Send change of address to *Woodsmith*, Box 37112, Boone, IA 50037-2112.
Subscription Questions? Write to *Woodsmith*, P.O. Box 842, Des Moines IA 50304-9961 or call 1-800-333-5075, 8:00 am to 5:00 pm, Central Time, weekdays.
E-Mail: augusthome@aol.com
World Wide Web: http://www.augusthome.com

Printed in U.S.A.

SAWDUST

When I first started woodworking, most of the projects I built were small ones. That's because they didn't require a lot of time or material to build. And when I made a mistake, it wasn't a big deal to cut another piece and try again.

While I still continue to make mistakes, I find that I do make fewer of them. However, I still like to build small projects. But for different reasons. For one thing, I don't have to worry about how I'm going to get the project through the door of my shop once it's finished. And because a small project doesn't take up much space, I don't have to hunt for a spot in the house to put it.

The three small projects in this issue have other benefits as well. They give you a chance to try out some new woodworking techniques without spending a lot of time or money.

DISPLAY CASE. Take the display case found on page 6, for example. To give the case a traditional look and feel, we added a carved drawer front and hand-cut dovetails. With a larger project, this might mean a lot of extra work. But because this case is small, all it needs is a simple, understated carving and hand-cut dovetails. So if you've ever wanted to try your hand at either of these two techniques, this is a good project to start with.

ACCESSORY BOX. When it came to the accessory box featured on page 28, we were looking for a contemporary look. So we used contrasting woods. The top of the box contains a panel made of bird's eye maple. For a nice contrast, we could have used ebony for the rest of the case. But ebony is expensive and hard to come by. Not to mention being difficult to work with. So instead, we experimented with a technique known as ebonizing.

Basically, this involves staining a common wood (we used walnut) to look like ebony. Here again, because the project is small, it's a good opportunity to try out a new technique.

COOKBOOK RACK. The cookbook rack on page 14 is also a small project, but it probably won't present any difficult challenges. The nice thing about it, however, is that it can easily be completed in a weekend. If you've ever built a project that takes a long time to build, I think you'll find this cookbook rack to be a nice change of pace.

TABLE SAW STAND. Not all the projects in this issue are small. When Ted Wong, our new project designer, came on board, we gave him a test. We asked him to design a table saw stand that would meet two criteria — it needed to be rock solid, and it needed to be mobile. (Two features which don't usually work together.) Well, he passed the test with flying colors.

The table saw stand on page 20 uses a clever cam device to raise and lower the casters. So all you have to do is step down on a lever to drop the casters down and roll the stand around. Then by flipping the lever up, the stand is firmly planted on the floor.

Terry

A LOOK INSIDE

CONTENTS

Features

Display Case 6

This walnut case provides an elegant home for treasured heirlooms. And it provides a showcase for a couple of interesting woodworking techniques as well.

Handcut Half-blind Dovetails 10

Making this traditional drawer joint is simpler than it looks. Our step-by-step instructions will show you how to cut a perfect-fitting, half-blind dovetail joint quickly and accurately.

Detail Carving 12

Here's a chance to try your hand at carving without having to learn any complicated techniques. All you need are a few simple tools and our complete instructions.

Cookbook Rack 14

This great-looking project offers two cookbook storage areas. Plus, there's a handy, pull-out drawer for storing recipe cards. Best of all, you can start and finish this project in a weekend.

Table Saw Stand 20

There's more to this project than just sturdy construction. It features a removable dust bin and convenient sliding racks for storing accessories. Plus, it has a unique cam-activated caster system that makes it easy to move your table saw around the shop.

Accessory Box 28

It's the details that make this project unique. From the gently curved sides to the inset veneered panel, this project packs a lot of woodworking into a small package.

Departments

Tips & Techniques 4
Shop Notes 18
Reader's Jig 34
Sources 35

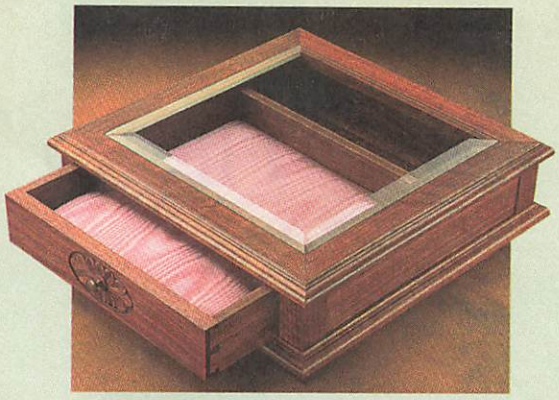

Display Case *page 6*

Cookbook Rack *page14*

Table Saw Stand *page20*

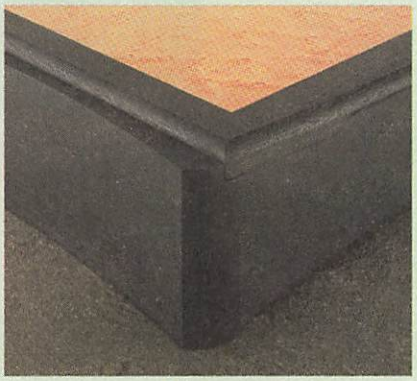

Accessory Box *page 28*

TIPS & TECHNIQUES

Crosscut Jig

It's tough to get consistently square crosscuts with a circular saw. So I made a simple jig that guides the saw accurately, cut after cut.

The jig is a wood box that fits around a specific size of "two-by" stock. The workpiece slips through openings cut in the sides.

Screwed to the top at a right angle to the slots are saw guides. These are spaced to match the width of your saw shoe.

Just position the jig over your layout mark and hold it in place to guide your saw during the cut.

Doug Thalacker
Racine, Wisconsin

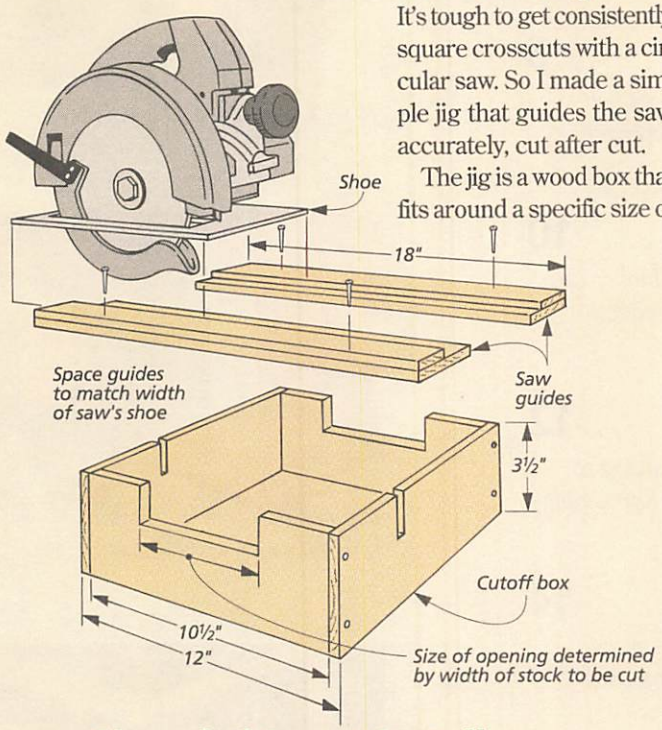

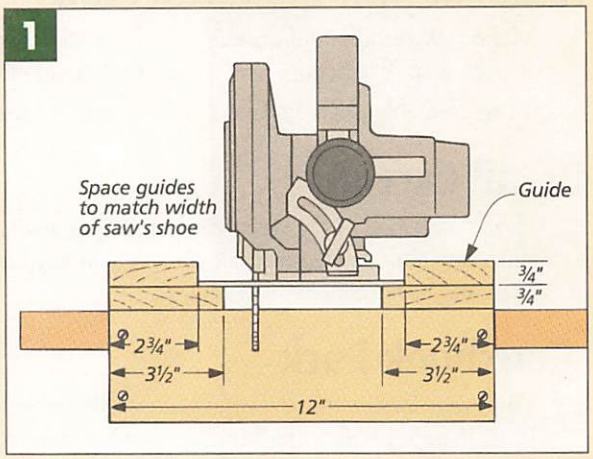

Threaded Insert Installer

Most of the devices I've seen for installing threaded inserts use a nut and bolt to drive the insert into a workpiece. The problem with this technique is trying to keep the insert straight while screwing it in.

The threaded insert tool I made also uses a nut and bolt—but it holds the insert upright at the same time.

The tool is just a block of wood with a hole drilled through one end to accept a nylon spacer. The spacer holds the bolt straight while you tighten it down. On the other end of the bolt is a spring, a nut, and a washer. The spring supplies just enough pressure to hold the insert straight while you're installing it.

Wally Cook
Thetford, New Hampshire

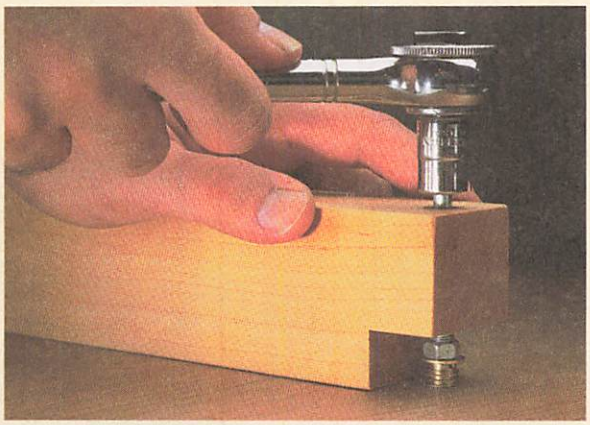

▲ *A nylon spacer and a spring help to hold the threaded insert upright while you drive it into the workpiece.*

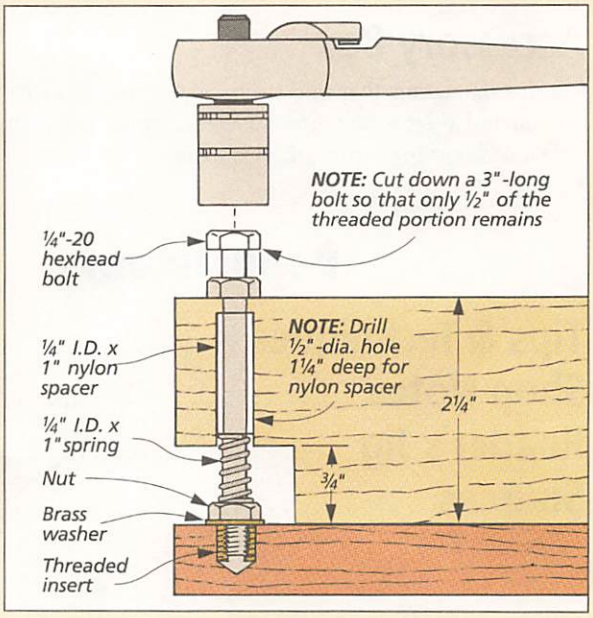

Sharp Tool Holder

I use a number of small, sharp tools for scribing, marking, and cutting workpieces. But it's hard to protect the blades of these tools if they're stored loose in a drawer or toolbox.

To protect the sharp edges but still keep each tool close at hand, I made a small knife and tool holder.

It's nothing more than a piece of dense foam insulation (blue board). And to keep the block anchored to my workbench, I built a wood frame to fit around the foam, see photo at right. When the foam gets too chewed up, I just flip it over.

Lee Tjelmeland
Vinton, Iowa

Angled Holes

The table on my drill press doesn't have a gauge for drilling angled holes. So instead, I use the miter gauge from my table saw.

I set the miter gauge to the angle I need and place the gauge on the drill press table so the bar passes through the opening in the table. By visually lining up the miter gauge bar with the column of the drill press, I can set the table top to the correct angle.

Bud Pierce
El Cajon, California

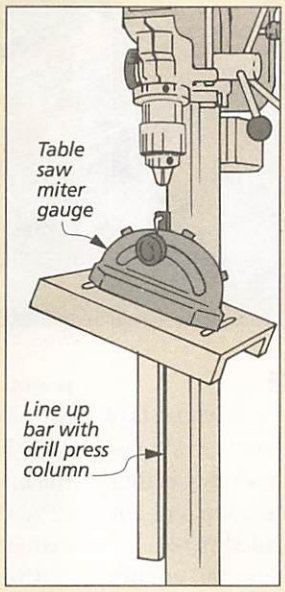

Keyhole Slot Hanger

Keyhole slot hangers are great for hanging mirrors or pictures, but locating the position for the wall mounting screws can be difficult.

Recently, I hit upon a solution using push pins. Just slide a pin into each keyhole slot and then use Scotch tape to hold it in place.

Now position the mirror or picture right where you want it on the wall. Then lightly press the pins into the wall. The pins leave tiny holes so that you know just where to install the mounting screws.

David Zeidler
Shakopee, Minnesota

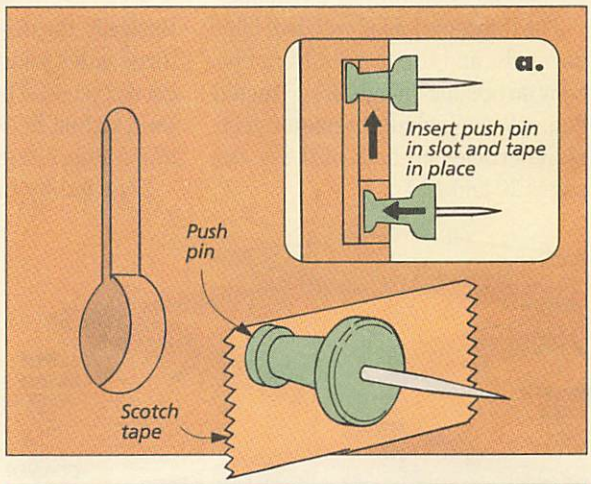

Dust Bag Magnets

Trying to replace the bag on an older dust collector can be a real chore. You really need an extra set of hands to hold the bag in place while the fastening strap is attached.

To solve this problem, I use two or three small round magnets. Simply place the magnets around the top of the bag to hold it in place. Then slide the strap up to secure the bag.

Lee Alexander
Franklin, North Carolina

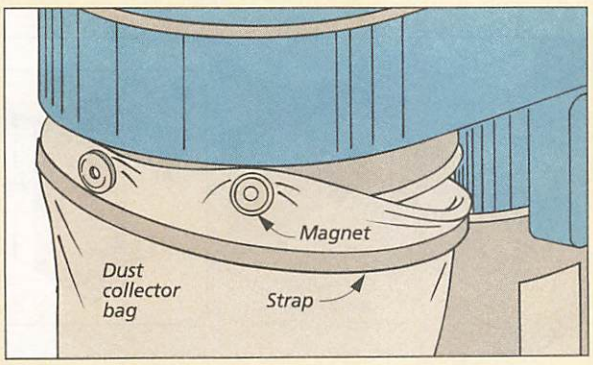

Quick Tip

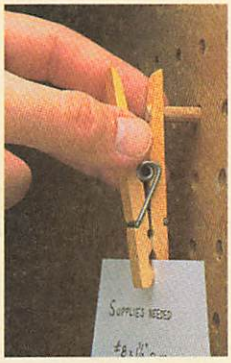

▲ *To make a pegboard clip for hanging notes, just drill a hole through a clothespin and glue in a short length of dowel.*

Loyal Huson
Gassville, Arkansas

SUBMIT YOUR TIPS

If you would like to share an *original* shop-tested tip, send it to: *Woodsmith*, Tips and Techniques, 2200 Grand Avenue, Des Moines, Iowa 50312. Or if it's easier, FAX it to us at: 515-282-6741. Or use our E-Mail: 75330.2301@compuserve.com.

If published, you'll receive $30 to $150, depending on the published length. Include a brief explanation and sketch or photo. And don't worry, we'll rewrite the tip and redraw the art, if necessary. Also, *please* include a daytime phone number.

DISPLAY CASE

Half-blind dovetails and a carved medallion make this case worthy of displaying your most treasured possessions.

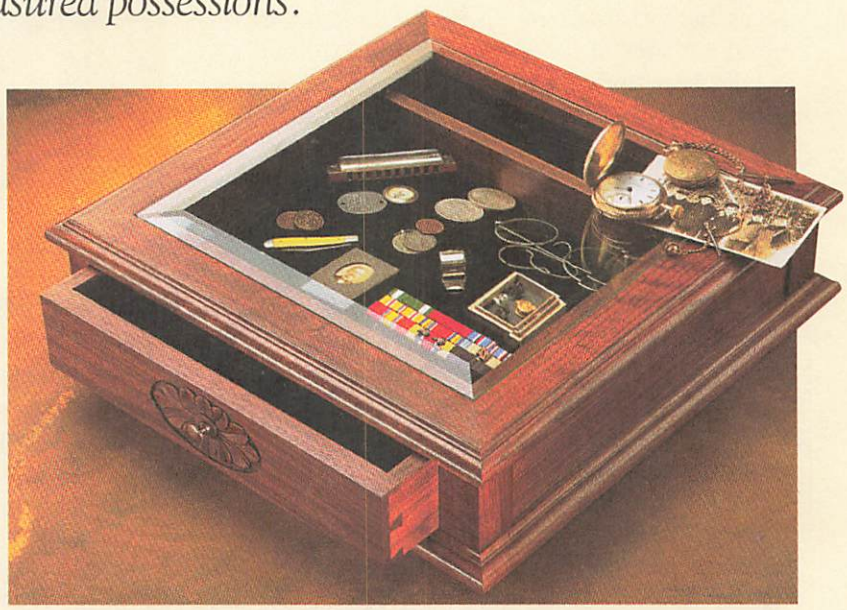

Not too long ago, I happened to be visiting a history museum. Of all the objects in the place, my eye was somehow drawn to some artifacts that were displayed in a handsome wood case with a beveled glass top.

That case was the inspiration for this scaled-down version. Our case is small enough to sit on top of a coffee table or desk and is designed to hold a few of your favorite keepsakes. A drawer allows you to easily rearrange the items you have on display.

This case does more than just show off your prized possessions, it gives you a chance to try your hand at a few special woodworking techniques.

The drawer is joined with half-blind dovetails, and the drawer front contains an optional, hand-carved medallion. (We've included separate technique articles on both of these, see pages 10 and 12.)

CASE

Basically, the display case consists of three sides joined together by four corner posts. This assembly is then sandwiched between a top and bottom frame, see exploded view.

I started by building the **corner posts (A)**. Each post is made up of two pieces that are grooved, beveled, and glued together at a right angle. But because the posts are fairly short (2⅝"), I decided to start with two extra-long pieces, see Fig. 1.

After ripping the two blanks to

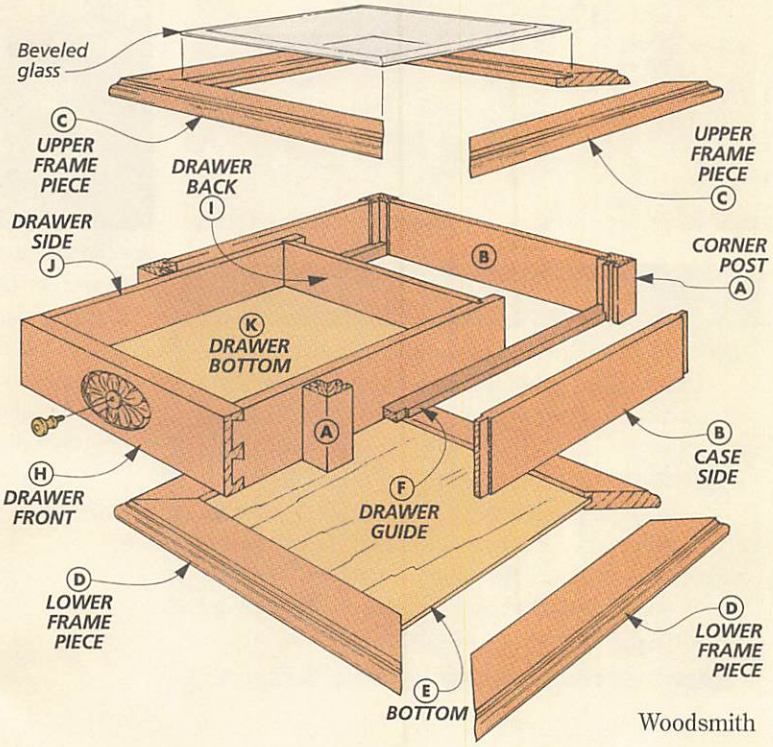

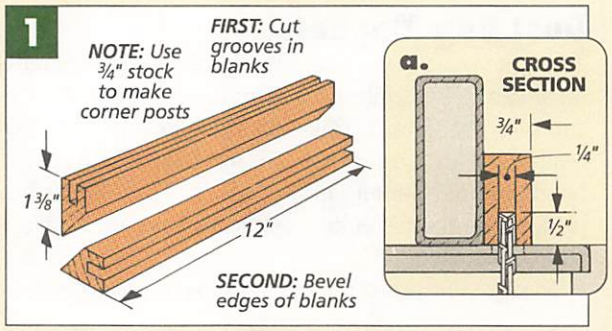

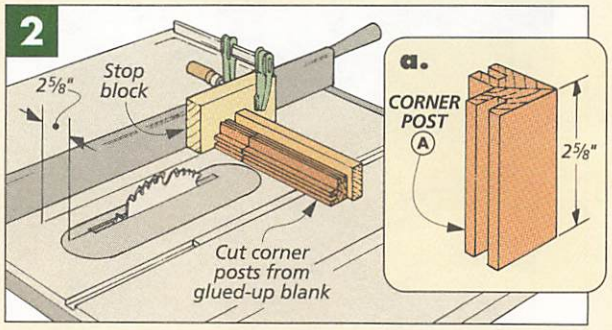

width, cut a centered groove on one edge of each piece to accept the case side, see Fig. 1a. Then rip the other edge at a 45° bevel and glue the two pieces together. After the glue dries, cut the posts to length, see Fig. 2.

SIDES. The corner posts are connected by three **case sides (B)**, see exploded view. The fourth side is left open to receive the drawer.

After cutting these pieces to finished size (2⅝" x 14"), I cut ½"-long tenons on each end to fit in the grooves cut in the corner posts, see Fig. 3.

Once I finished cutting all the tenons, I glued the sides to the corner posts, see Fig. 4. To help keep the box square during glue up, I cut a spacer block out of a piece of scrap wood.

When the glue is dry and the spacer block is removed, the corner post grooves facing the drawer opening are exposed. To conceal them, I glued in a couple of filler strips, see Fig. 5.

FRAMES. The frames are the final pieces of the case. The upper frame holds a piece of beveled glass and the lower frame holds a plywood bottom.

Start by ripping the four **upper frame pieces (C)** to width (2⅜"). But don't cut them to length yet. First, cut a 3/16" x ½" rabbet on each piece to hold the beveled glass, see Fig. 6a.

Now cut the pieces to final length (16⅝"), mitering the ends at 45°. Then glue up the frame and set it aside.

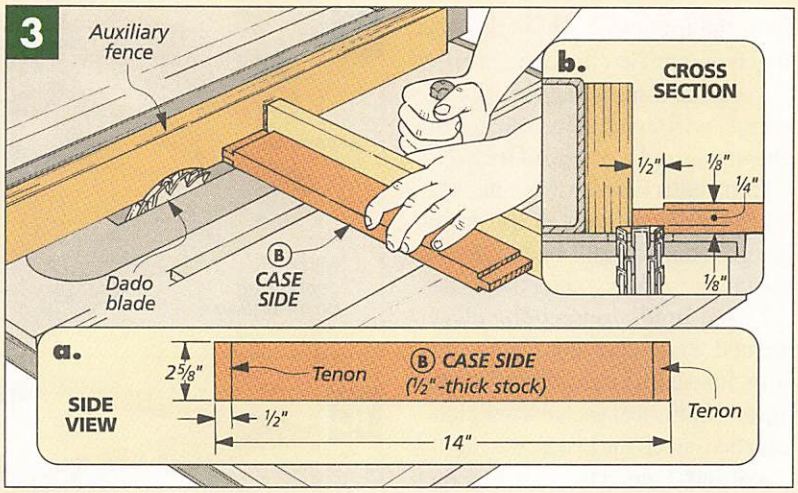

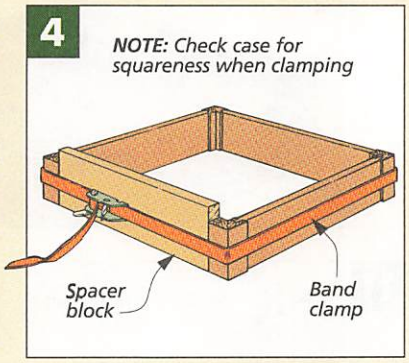

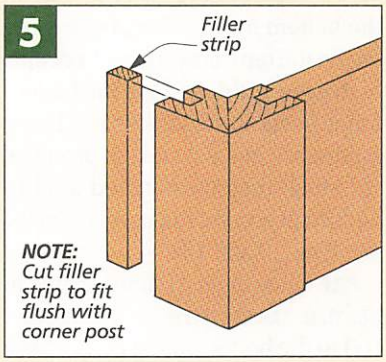

To make the lower frame, start by ripping four **lower frame pieces (D)** to width. Instead of a rabbet, these pieces receive a ½"-deep groove to hold a ¼"-thick plywood **bottom (E)**, see Fig. 7a. The lower frame pieces are also mitered, but they're slightly longer, (17"). Finally, cut a bottom to fit and glue up the frame, see Fig. 7.

To complete the frames, I first routed a decorative profile on the top, outer edge of each frame, see Figs. 8 and 8a. (For sources for the router bit I used, see page 35.) Then I rounded over the bottom edges with a ⅛" round-over bit, see Fig. 8b.

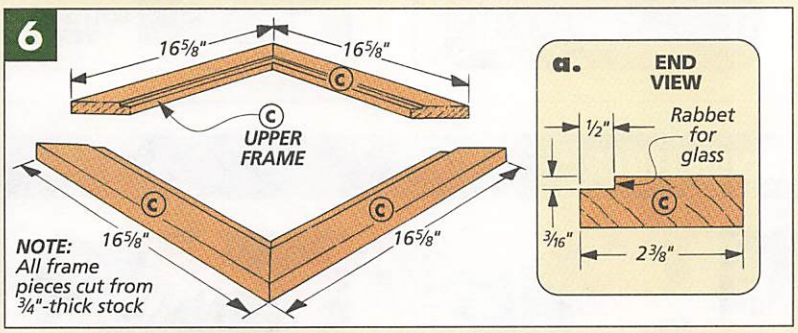

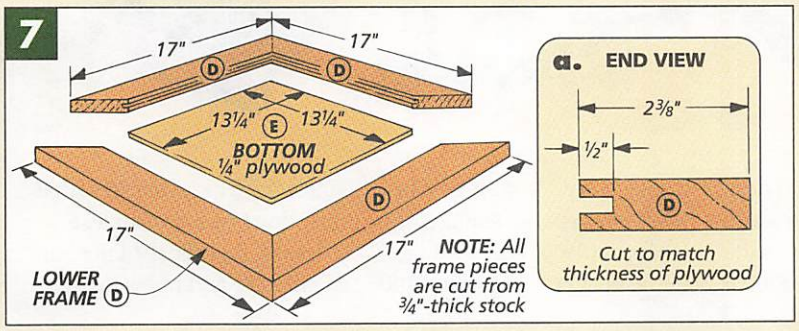

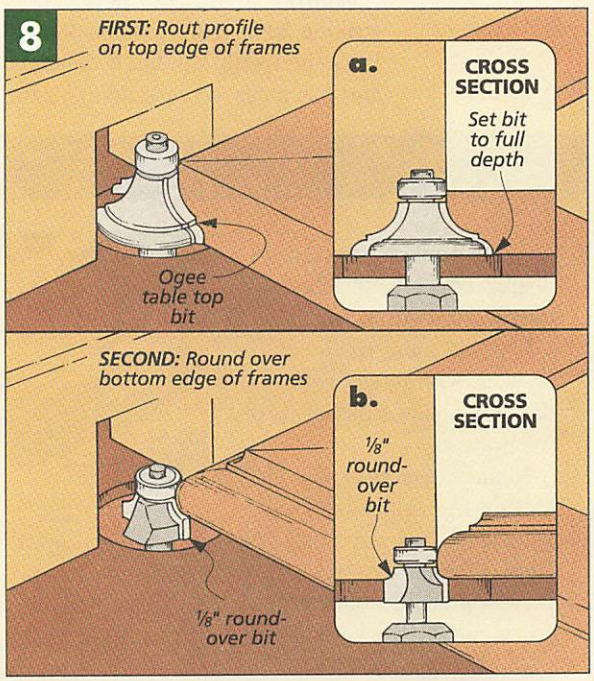

With the frames glued up, the next step is assembling the case. In order to keep the frames aligned with the corner posts and sides during the glue-up, I used a couple of tricks.

CENTER LINES. First I drew center lines on the sides as well as the frame pieces. This way all I had to do was line up the marks to center the frames.

I used brads to keep the pieces aligned while applying clamp pressure. Just nail a brad halfway into the top and bottom of each corner block, and then cut off the heads, see Fig. 9a.

ASSEMBLY. I glued the case together in two steps. First I glued the sides to the bottom frame. Then, before gluing on the top frame, I glued a couple of **drawer guides (F)** to the bottom frame on the inside of the case. These guides are just a couple of pieces of ½" stock that are notched at both ends to fit around the corner blocks, see Figs. 10 and 10a.

FEET. Once the top frame is glued in place, the next step is to add four **feet (G)** to the bottom of the case. These feet are 1⅜" square pieces of ¼"-thick stock that are rounded over on the edges, see Figs. 11 and 12. Safety Note: I used a small handscrew to hold each foot while routing the edges, see Fig 11a. The feet are glued to the bottom of the case, and then a small square of felt is glued onto each foot for a pad, see Fig. 12a.

DRAWER. The drawer is the most striking feature of the display case. It's joined with half-blind dovetails and has a carved medallion on the

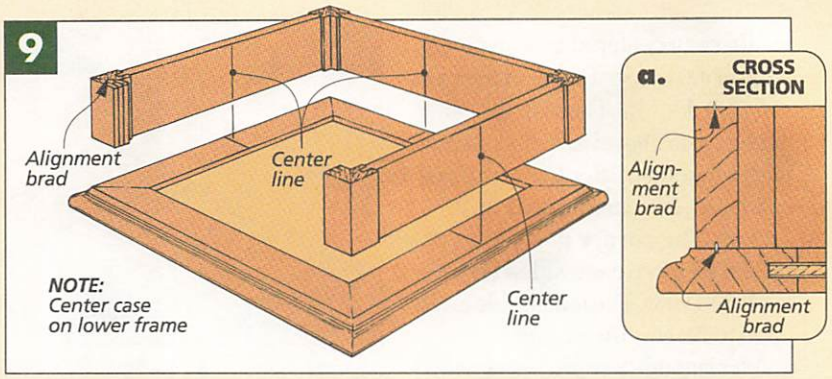

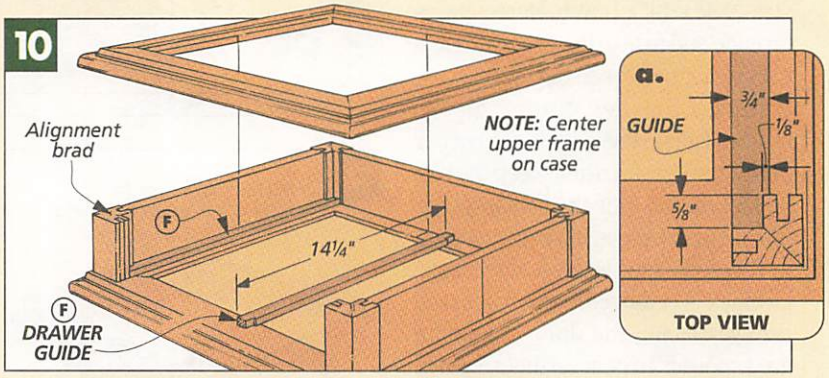

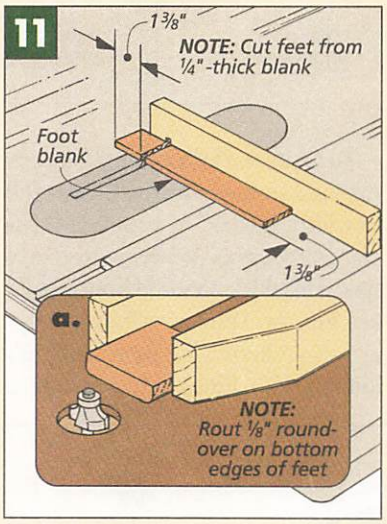

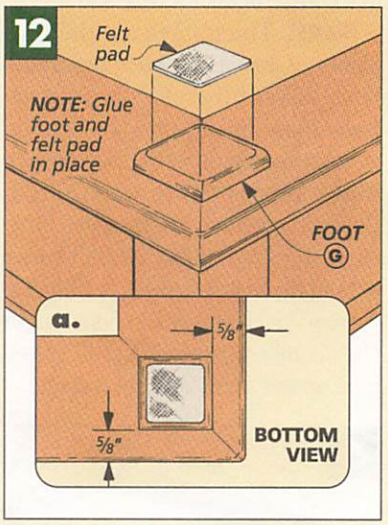

DRAWER LINER

To protect objects placed in the display box, I made a liner for the drawer bottom.

Start by cutting a piece of ½" plywood slightly (¼") smaller than the inside dimensions of the drawer.

Next, cut a piece of polyester batting the same size as the plywood. Then, cut a piece of fabric 4 inches larger.

Now place the fabric face down and lay the batting and plywood on top of it. Then, gently press the plywood down, and wrap one side of the fabric over the edge tacking it in place with a staple. Work your way around, stapling the fabric in place. When you get to the corners, fold down and staple the flaps of fabric so that they don't cause wrinkles.

Finally, just slip the liner into the drawer and press it down.

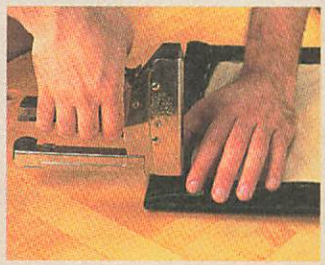

front. (If you're not comfortable with making the carving, you can substitute an elegant brass bail-style pull, see photo in margin at left.)

I started by cutting out the pieces for the **drawer front (H)**, **drawer back (I)**, and **drawer sides (J)**. Then I cut a 1/4"-deep groove on the inside face of the drawer front and sides to hold a 1/4"-thick plywood bottom, see Fig. 13c for groove dimensions.

Next, I cut a dado near the end of each drawer side to hold the drawer back, see Fig. 13a. Then I cut a tongue on each end of the drawer back to fit snug in the dadoes, see Fig. 13b.

CARVING. The drawer front is joined to the sides with half-blind dovetails. But before cutting the dovetails, I carved the floral pattern on the front of the drawer (see separate article on page 12). That way, if I made a mistake while carving, all I had to do was start over with a new blank.

HALF-BLIND DOVETAILS. With the carving completed, I began on the half-blind dovetails. I cut these dovetails by hand (see page 10 for details). But the drawer is sized to allow you to use machine-cut dovetails if you prefer.

Once all the joints were fitted together, I cut a **drawer bottom (K)** out of 1/4" plywood. Then I glued up all the drawer parts.

FINISH. With the drawer complete, I applied a couple coats of a wipe-on oil finish to the case and drawer.

After the finish was dry, I attached a small brass knob to the drawer front. Then I added a cushioned insert to the inside of the drawer, see box at bottom of page 8.

Finally, to complete the case I added the beveled glass. For more on this see Sources on page 35. W

▲ *The drawer of the display case features hand-cut dovetails, a carved medallion, and a brass knob.*

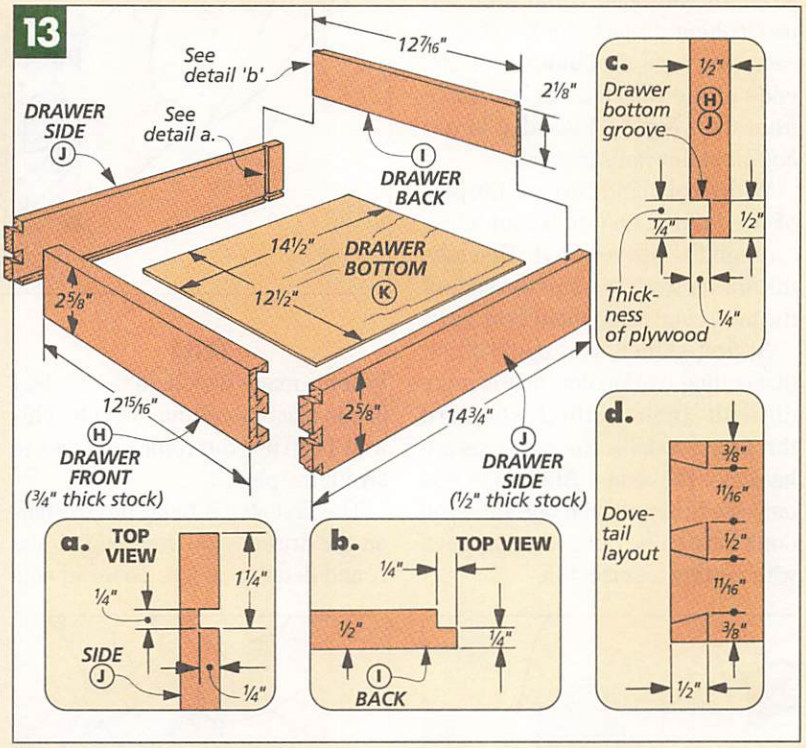

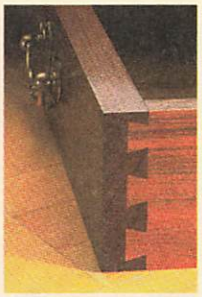

▲ *As an option, you can build the drawer with machine-cut dovetails and a brass bail pull.*

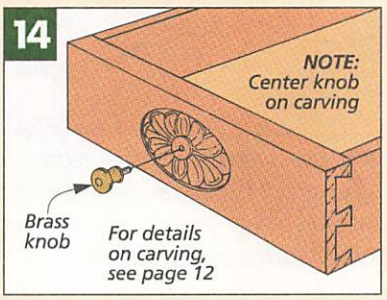

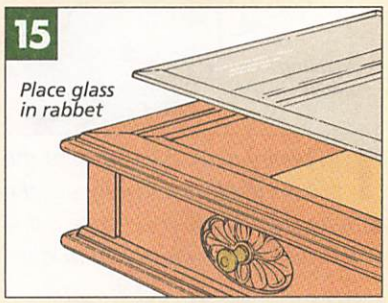

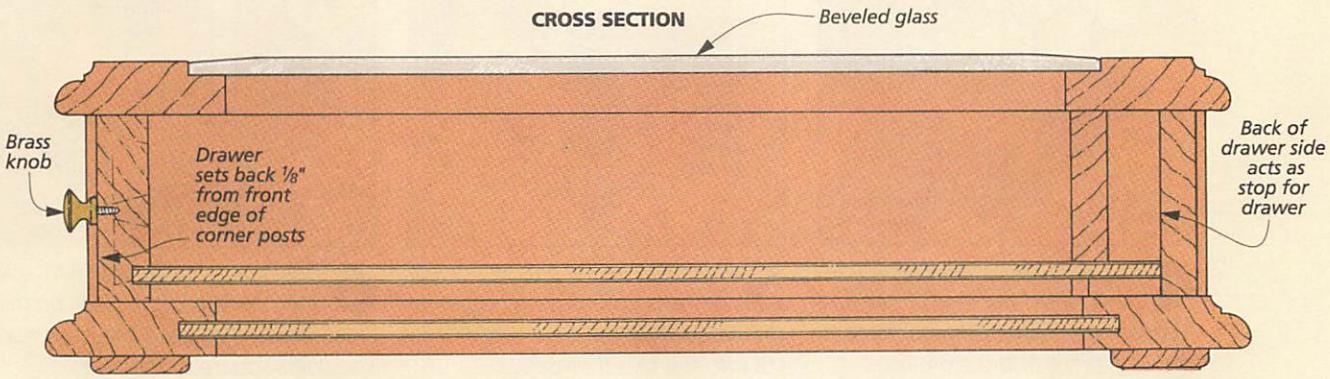

HALF-BLIND DOVETAILS

When it comes to drawer joints, nothing can beat a dovetail for strength and beauty. But on a formal-looking project like the display case (see page 6), I didn't want the ends of the dovetails to be visible from the front. So I decided to use *half-blind* dovetails instead.

With a half-blind dovetail, the pins of the joint aren't cut completely through the drawer front. This way, the drawer front overlaps the ends of the tails, concealing them from view.

At first glance, you might think that cutting half-lap dovetails is more difficult than cutting standard through dovetails. But the steps are basically the same. And since you only see the joint from one side, you don't have to be quite as concerned with getting a perfect fit.

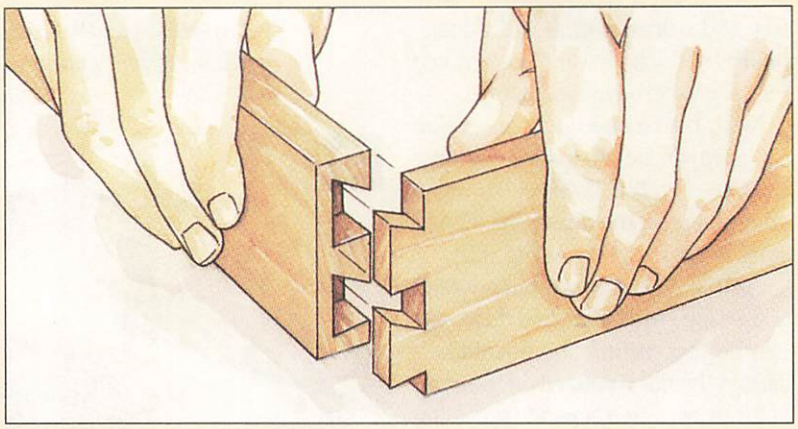

TAILS

When I make half-blind dovetails, I like to start by cutting the tails. This way, I can use the completed tails to layout the pins.

The first step is to lay out the tails on the drawer side, see Steps 1 and 2, and detail 'a' at left. To avoid confusion, I like to mark the waste sections between the tails with an 'X'.

Removing the waste is a two-step process. First, I use a fine-toothed hand saw to cut along the waste side of the layout lines, see Step 3. Then I carefully chisel out the waste, see Steps 4 and 5.

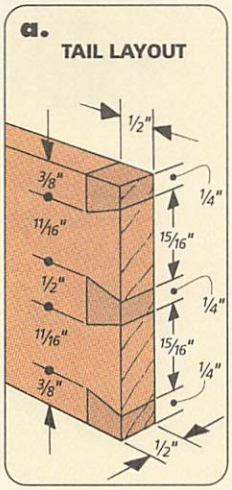

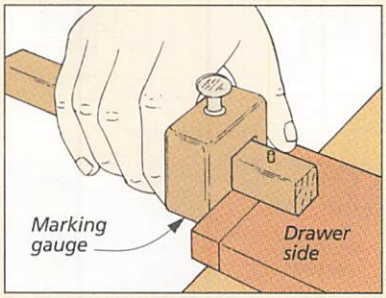

1 *To begin, mark the length of the tails on the face and edges of the drawer side. To do this, score a line with a marking gauge or X-Acto knife.*

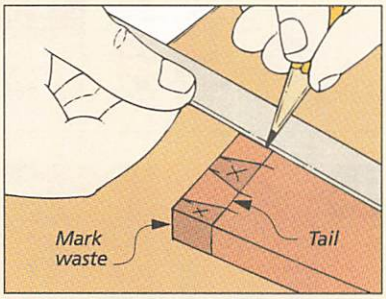

2 *Use a ruler and straightedge to lay out the tails according to the measurements shown in detail 'a' at left. Mark the waste with an 'X'.*

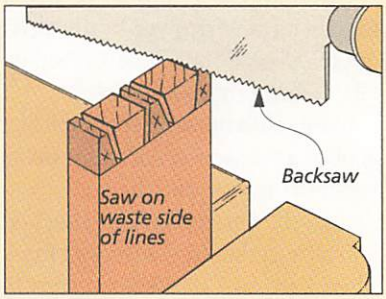

3 *After laying out the angles, use a fine-toothed back saw to cut along waste side of each layout line. Be careful not to cut too deep.*

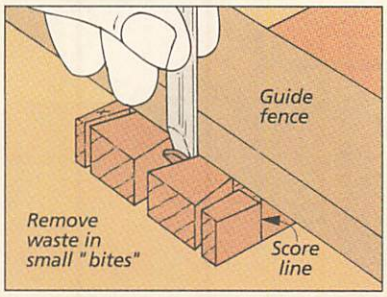

4 *The waste between the tails can be chiseled out next. To ensure a square cut, clamp a guide fence to the workpiece at the score line.*

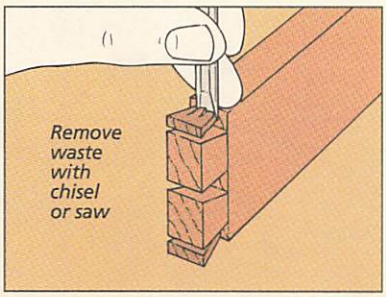

5 *Now remove the two sections of waste on the outside edges of the workpiece. But take care not to cut into the tails themselves.*

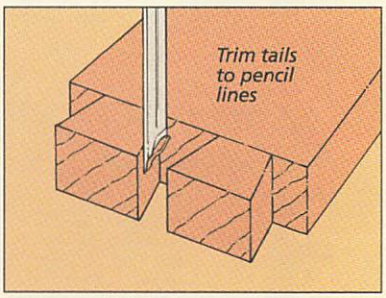

6 *Finally, to complete the tails, use light, paring cuts to clean up the sides. Be sure to keep the sides and shoulders square to the face.*

After removing all the waste, clean up the sides of the dovetails by making light, paring cuts with the chisel, see Step 6. The goal here is to keep the shoulders and sides of the tails square with the face of the workpiece.

PINS

With the tails cut, laying out the pins is a snap. Just place the tails over the end of the drawer front and trace the outline, see drawing at right. Then scribe a baseline on the inside face of the drawer front to indicate the thickness of the drawer sides, see Step 7.

Now use a square and a pencil to extend the layout lines down the face of the workpiece, see Step 8.

When cutting and chiseling out the waste around the pins, the trick is to stay well away from the penciled layout lines. If you remove too much material, you'll wind up with a loose-fitting joint.

To remove the waste, I start by making diagonal cuts on the waste side of the lines, see Step 9. Hold the saw at a steep angle until you reach the scribed baseline and then level it out to finish the cut. Next, carefully chisel out the waste, working from the end and inside face of the drawer front, see Steps 10 and 11.

After most of the waste is removed, start cleaning up the shoulders and sides of the pins, see Steps 12 and 13.

Check the fit of the joint. And make any necessary adjustments by lightly paring the sides or shoulders of the pins as needed, see Step 14.

Note: Since the joint will be visible only from the side, I like to undercut the sides of the pins slightly to ensure a close fit, see Step 15. W

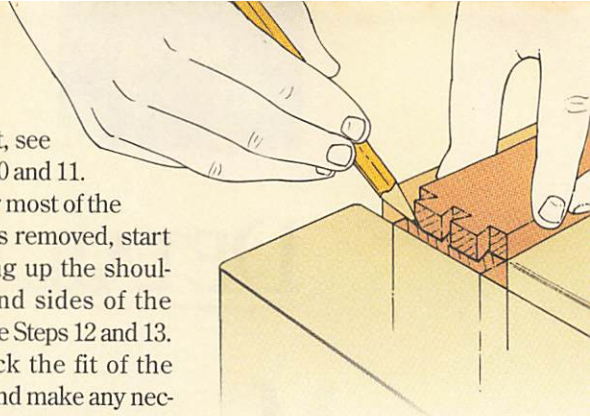

▲ *To mark the pins, transfer the layout of the completed tails to the drawer front.*

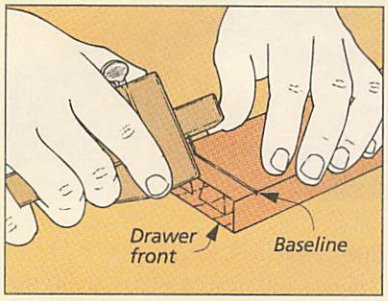

7 *After tracing outline of tails on the drawer front, use a marking gauge to scribe a baseline that equals the thickness of the side piece.*

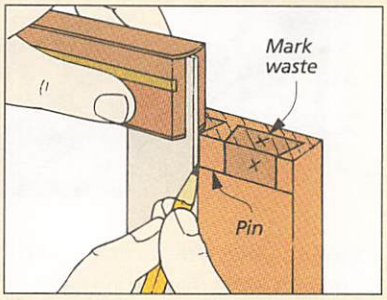

8 *With a square and a pencil, extend the layout lines of the pins down the face of the drawer front and mark the waste sections.*

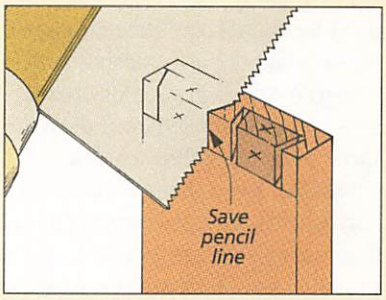

9 *Staying well to the waste side of the layout lines, begin removing the waste by making angled cuts in the end of the workpiece.*

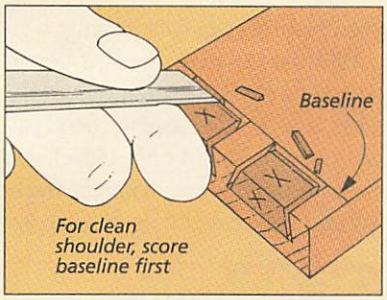

10 *Place chisel on scribed base line and tap straight down with mallet. Then pare away a small 'V' section in front of baseline.*

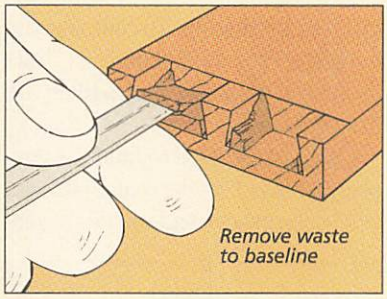

11 *Next, taking light cuts, continue removing the waste between the pins until you reach the baseline on the end of the board.*

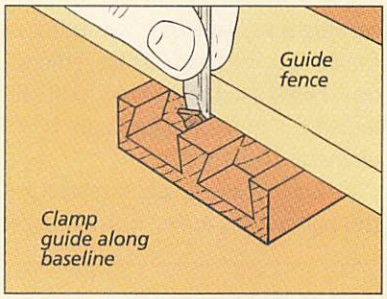

12 *Again, clamp the guide fence in place and square up the shoulders by chopping straight down with a chisel and mallet.*

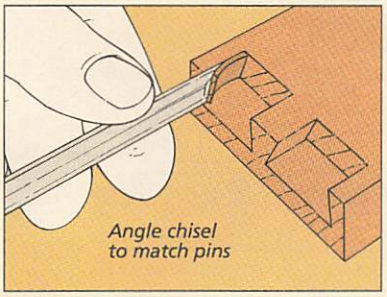

13 *Now, clean out the remaining waste on the sides of the pins by holding the chisel at an angle to follow the layout lines.*

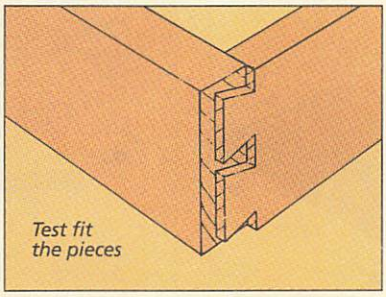

14 *Test the fit of the joint to determine which areas need to be trimmed further. Be careful not to trim too much at one time.*

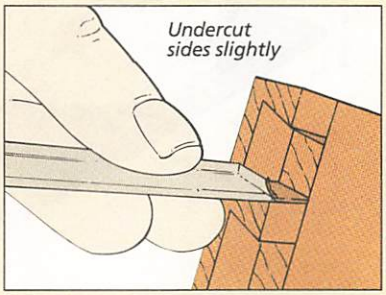

15 *Finally, if the fit is too tight, undercut the sides of the pins slightly until the tails fit nicely into the sockets created by the pins.*

DETAIL CARVING

Most of the carving I've done has been with a whittling knife on a stick. So when the idea of including a carving on the display case first came up, I was a little skeptical. After all, skilled carvers can spend years perfecting their technique.

Fortunately, the floral design we used for the display case on page 6 doesn't take long to master. And it doesn't require a drawer full of expensive carving tools either. (I used the three basic tools shown at left.)

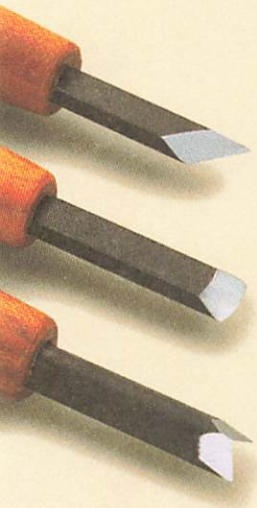

▲ *A basic set of carving tools is all you will need to complete the carving we've designed for the display case.*

PRACTICE. Even though this design isn't too difficult, carving is not a skill that many people are born with. So it's probably a good idea to make two or three attempts at this carving before you start on your actual drawer front. You'll be surprised at how much your work improves with each trial run.

OVAL TEMPLATE. The first step in this carving is to make the oval outline of the design. To create a nice, smooth oval, I used a template and a router fitted with a guide bushing and a 1/8"-diameter straight bit.

To make the template, I transferred the pattern (at upper right on next page) to a piece of 1/4"-thick hardboard. An easy way to do this is to make a photocopy of the design and iron it onto the hardboard, see Step 1. (I used the same method to transfer the pattern to the drawer front.) Then I cut out the oval and sanded the inside edge smooth. To complete the template, I attached a couple of cleats to the sides so that it straddles the drawer front.

Using carpet tape to hold the template in place, I set the router bit to cut a 1/8"-deep groove and routed the outline of the oval, see Step 2.

Once the oval is established, the next step is to score the outline of the individual petals to a depth of about 1/16", see Step 3. This prevents you from accidentally cutting into the design or chipping out a splinter as you chisel out the background.

CREATING THE RELIEF. Next, I began removing the background material all around the outline of the floral pattern using a round nose chisel, see Step 4. Continue removing the background material and deepening the

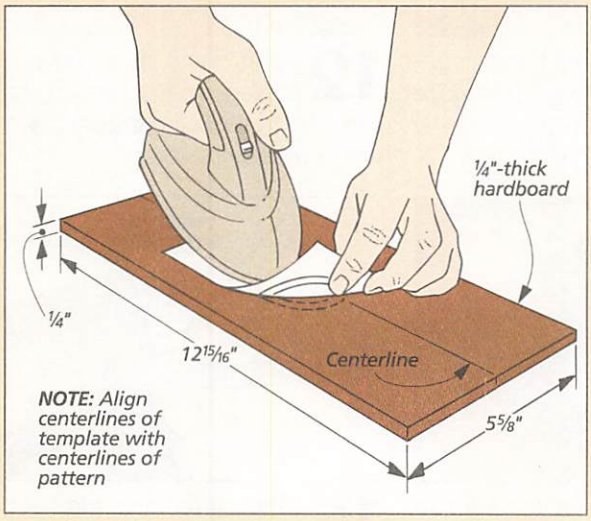

1 *After making a photocopy of the pattern, use an iron to transfer the design to both the hardboard template and the drawer front.*

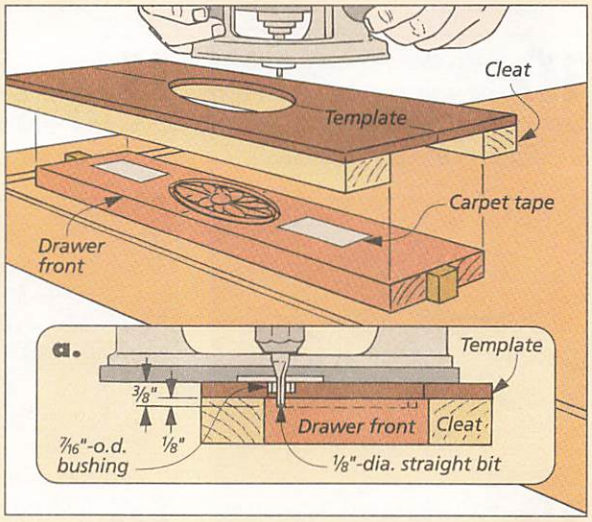

2 *After cutting out the oval and sanding the template smooth, attach it to the drawer front with carpet tape and rout the oval outline.*

outline around the design until the entire background is recessed to the same depth as the router cut (1/8").

SHAPING THE PETALS. With the background material removed, I set about shaping the petals. Here is where you start getting down to some real carving. I started by deepening the outline around each petal. To do this, I made a deep, slicing cut along the outside of each petal and around the center of the flower, see Step 5.

Now, to give the petals some dimension, I hollowed them out with shallow cuts, starting at the edge and cutting down and toward the vein of each petal, see Step 6.

As you remove material from the petals, the initial vein cuts will disappear. To avoid chipout, it's important to redefine these veins as you cut deeper and deeper into the petals. To do this, I re-cut each vein with a V-groove chisel, see Step 7.

Now just keep alternating between Steps 6 and 7. Continue hollowing out the petals until the veins are almost as deep as the carving background.

STIPPLED BACKGROUND. Once I had finished shaping the petals, I cleaned up the outline of the design with a sharp chisel. Then using a nail set, I stippled the background around the design, see Step 8. This evens out any roughness in the background and helps to accentuate the carving.

Finally, I smoothed out the toolmarks by lightly sanding each petal. To do this I just wrapped a small piece of 400-grit sandpaper around my finger and sanded each petal. Then I wiped the carving with a tack cloth to remove any traces of sanding dust.

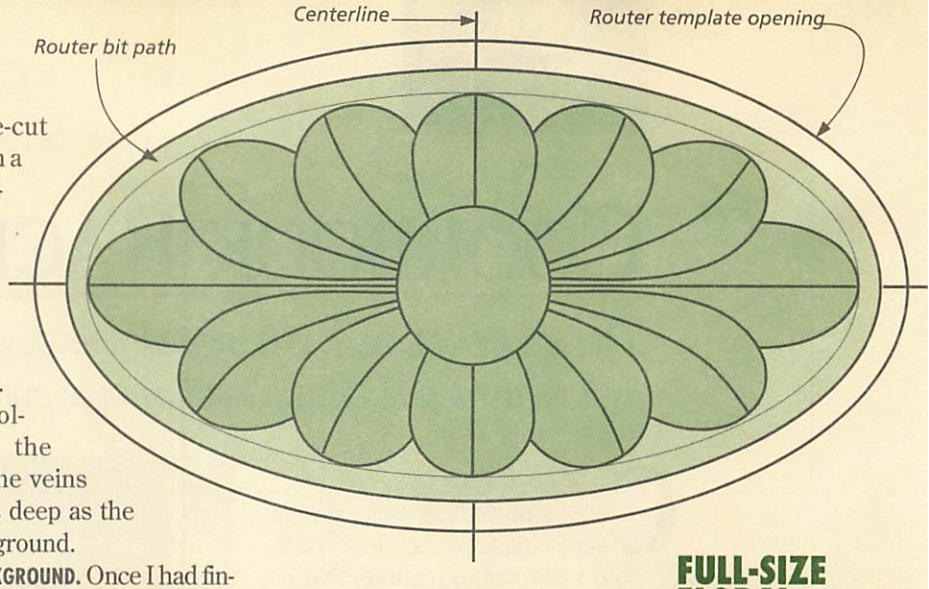

FULL-SIZE FLORAL PATTERN

Use large outer oval to layout template. Transfer inner floral pattern to drawer front.

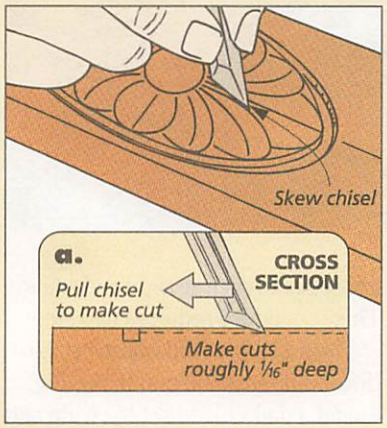

3 *Score all the lines of the floral design with a chip carving knife or skew chisel. To help maintain control while cutting, use light pressure.*

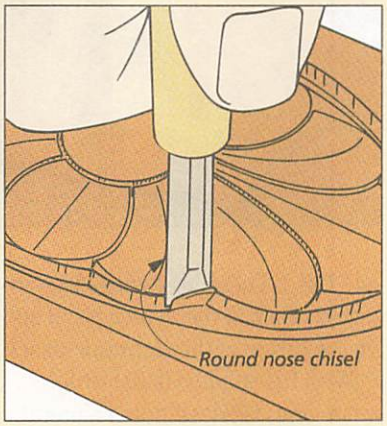

4 *Start chiseling out the background material. Take shallow cuts to avoid chipping out a large splinter of wood.*

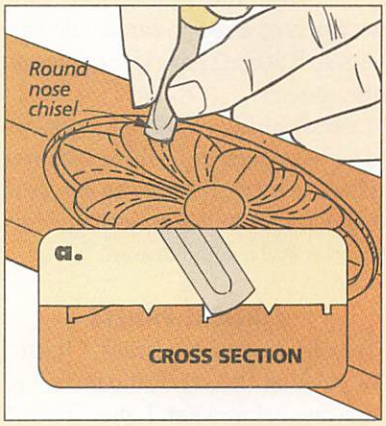

5 *To make the petals appear distinct from one another, make a beveled, slicing cut around the outside edge of each petal.*

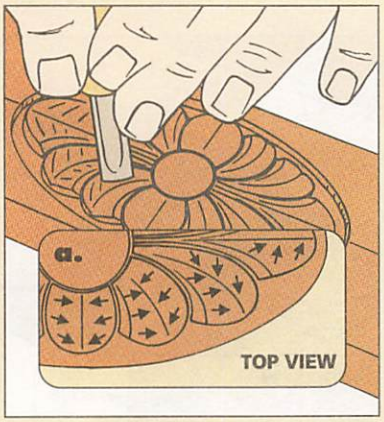

6 *Start hollowing out the petals. Working toward the center of each petal, make shallow cuts down into the veins to avoid chipout.*

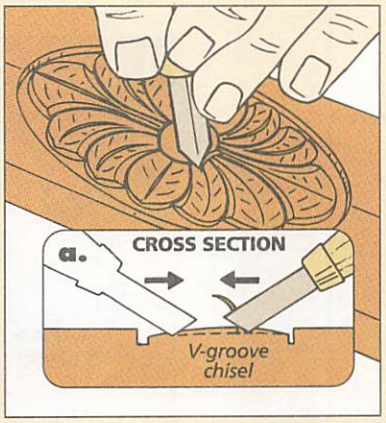

7 *As you hollow out the petals, redefine the veins using a V-groove chisel. Working from both ends of the petal, cut each vein in two passes.*

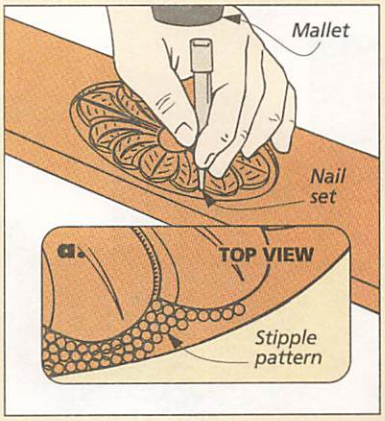

8 *Using a nail set and a hammer, stipple the background of the design. Use even-pressured blows to create a uniform-looking background.*

COOKBOOK RACK

This cookbook rack is designed with features that make it as functional as it is attractive. But it's still simple enough to be built in a weekend.

Coming up with ideas for designing a cookbook rack wasn't difficult. I just had to mention that we were building one, and I was flooded with plenty of suggestions.

"Make it small enough to be able to sit on my counter...but big enough to hold my favorite cookbooks."

"And a small drawer for recipe cards would be especially handy."

"Also, can you come up with some way to hold a recipe card while baking, so it doesn't have to lay down on the counter?"

So with this cookbook rack, we decided to include all these features. Plus one more: It had to be simple to build. Basically, this project is just six boards and a small drawer.

▲ *A simple groove cut across the shelf will hold a small recipe card.*

VERTICAL PANELS

To build the cookbook rack, I started by making the vertical panels, see drawing below. First, I glued up ¾"-thick stock and cut three **vertical panels (A)** into 10" x 10" blanks.

STOPPED DADOES. The next step is to rout stopped dadoes in two of the panels to hold a shelf, see drawing below and Fig. 1. These ¼"-wide dadoes are cut ¼" deep in the center panel and on the inside of the right side panel.

With the stopped dadoes routed, I cut a long, ½"-deep notch along the back of the center panel, see Fig. 2. This notch will fit around the back panel of the cookbook rack. And since the long edge of this notch will be seen (it butts up to the back), it's important to cut it straight and square. This procedure requires two steps.

The first thing I did was to establish the shoulder of the notch, see Fig. 2. I used a dado blade set ½" wide and clamped the panel to an auxiliary fence on my miter gauge. Then with the rip fence set 1⅛" from the dado, I made a single pass over the blade.

Now to remove the waste, I made

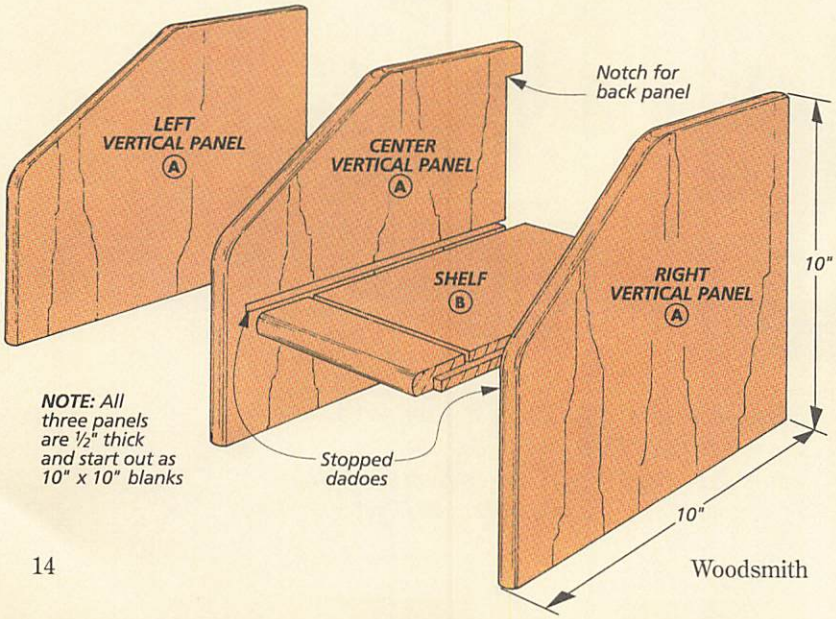

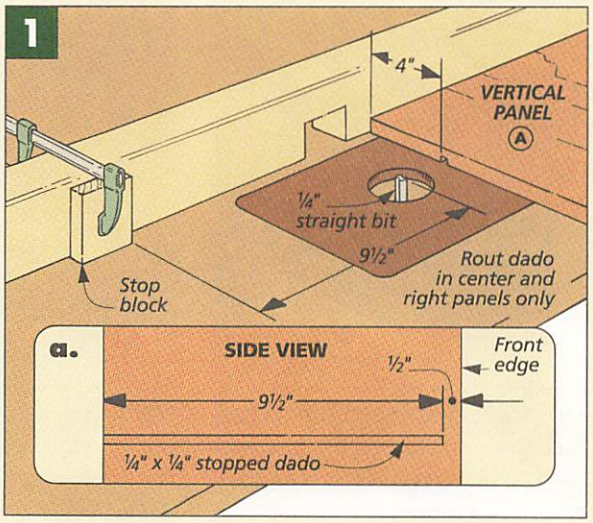

a rip cut to the notch, see Fig. 2. With this procedure, make sure the waste ends up on the outside of the blade so there's no kickback. And raise the blade high enough to avoid cutting into the shoulder.

With the notch cut in the center panel, I completed all the panels. First, I angled the front corner of each, see Fig. 3. Since these panels are identical, I carpet taped them together and cut the profile on the band saw. Then I sanded their edges smooth.

The last thing to do to the panels is to rout a bullnose profile on the top and front edges, see Fig. 4. To do this, I used a 3/8" round-over bit raised 3/16" above the router table, see Fig. 4a. Then I sanded the edges of the bullnose to remove the small, flat area.

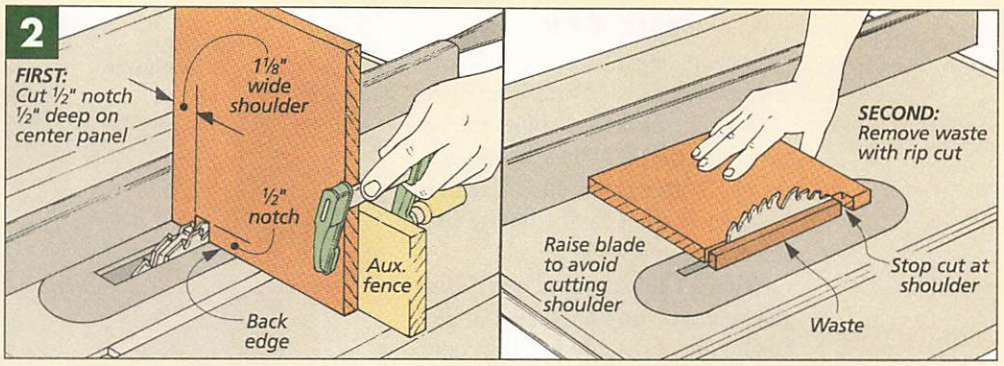

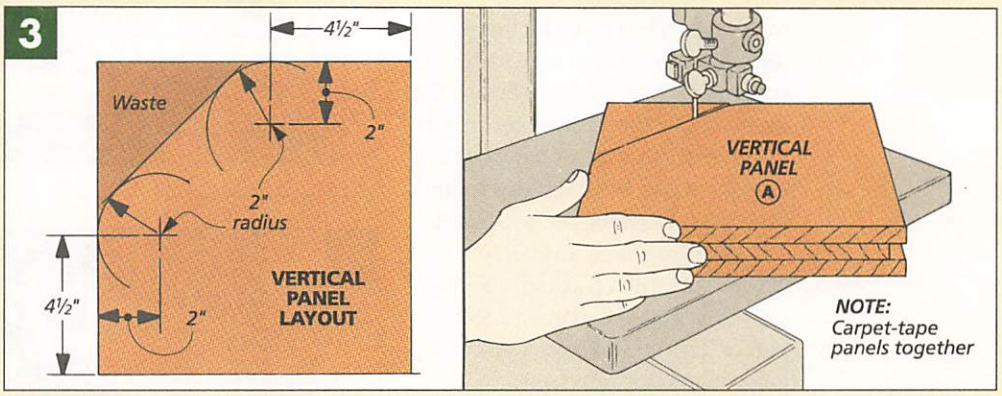

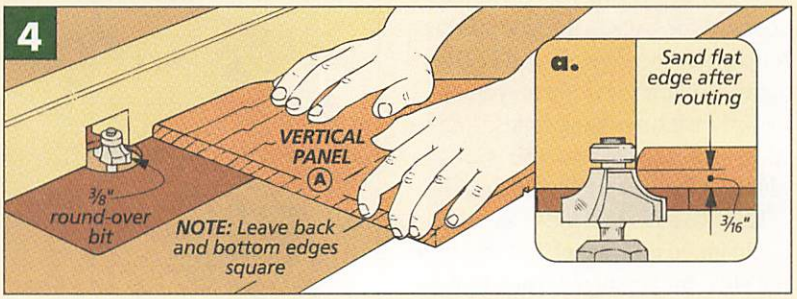

SHELF

Now that the side and center panels are complete, I added the **shelf (B)**, see Fig. 5. It starts off as a blank cut 9 3/8" x 6 1/4". Just make sure the grain of the shelf runs the same as the panels so they'll expand and contract in the same direction.

When the shelf is cut to size, I cut a rabbet across each end (edge) to form a tongue, see Fig. 5a. The tongues are sized to fit the stopped dadoes that were cut earlier in the side and center panels.

At this point, these tongues are longer than the dadoes on the panels. So to get the shelf to fit, the tongues need to be cut back, see Figs. 5 and 5b. I did this with a hand saw and a chisel. But don't worry about cutting the notch exactly the same length as the groove. It's okay if the tongues are a little short. The goal here is to get the shelf to fit between the panels so it's flush with the back of the center panel.

There are two more steps to complete the shelf. First, I cut a groove on the top face near the front, see Fig. 5b. This is to hold the recipe cards while baking, see margin photo on page 14.

Next, the same bullnose profile that's on the panels gets routed on the front edge of the shelf, see Fig. 5.

Now the shelf can be glued between the two panels, see Fig. 6. The only trick here is to use a spacer block to keep the assembly square.

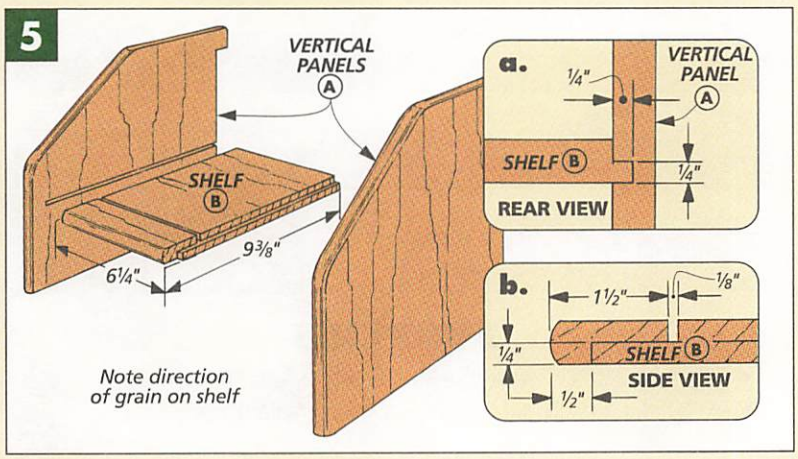

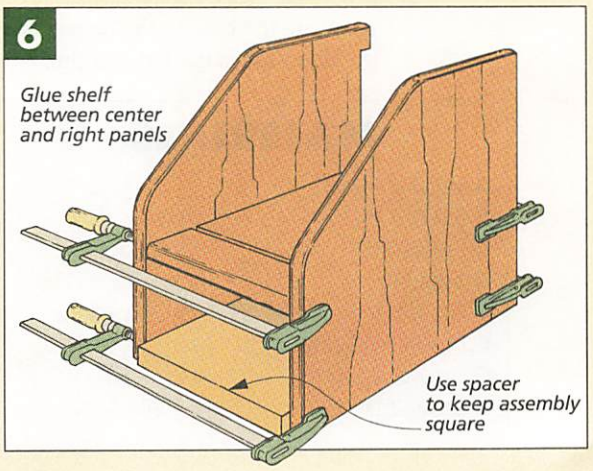

BACK & BASE

Now to complete the cookbook rack, all that's left is to add a back and base.

BACK. The back fits behind the center panel and butts into the two side panels. So after gluing up a blank from ½"-thick stock, I cut the **back (C)** to finished size, see Fig. 7.

What's a little unusual here is that the height of the back doesn't match the height of the notch in the center panel — the back is ⅛" taller. (Mine was 9" tall.) The reason for this is simple. Since the grain on the back isn't running in the same direction as the grain on the side and center panels, I needed some way to allow the back to expand and contract. But I didn't want a gap between the two panels.

So after the back was cut to size, I cut a ¼"-deep notch in it wide enough (½") to fit around the center panel, see Fig. 7a. This notch leaves a small (⅛") gap so the back can move.

When the notch was complete, I screwed the back to the side and center panels, see Figs. 7b and 7c. Here again, to allow for wood movement, I drilled oversize shank holes. And to hide the screws on the sides, I plugged the holes with ⅜" dowels.

BASE. To add the base to the rack, I again glued up a panel, but this time out of ¾"-thick material. Then I cut the **base (D)** to finished size, see Fig. 8.

The base has a simple profile cut on its front and sides. I ripped a 30° bevel along the top edge of the base, see Fig. 8a. Then on the bottom edge, I routed a ⅛" roundover.

Now, before screwing the base to the side and center panels, I added button plugs to the bottom of the base to act as feet, see Fig. 8b. (For a tip on screwing the base to the panels, see the Shop Tip in the left margin.)

SHOP TIP

▲ *When screwing the base to the panels, a stop block clamped to the base helps keep everything aligned.*

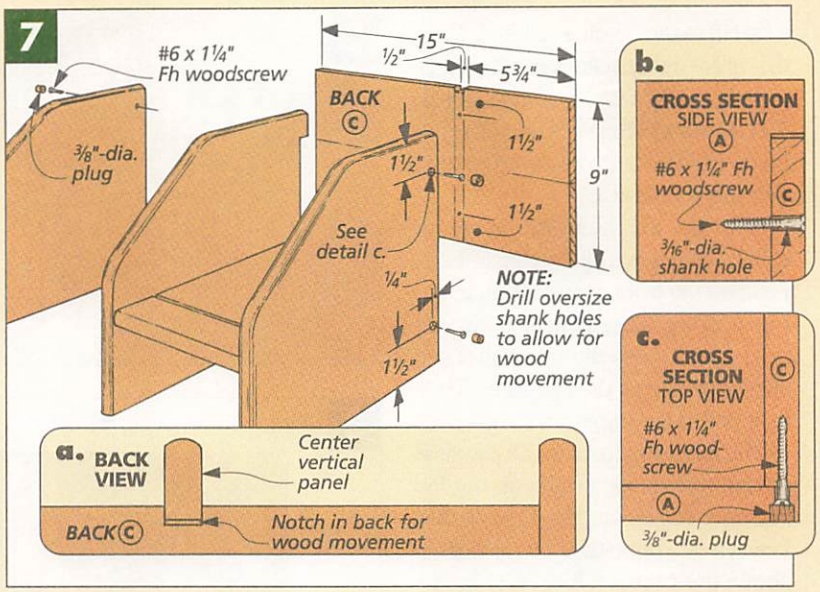

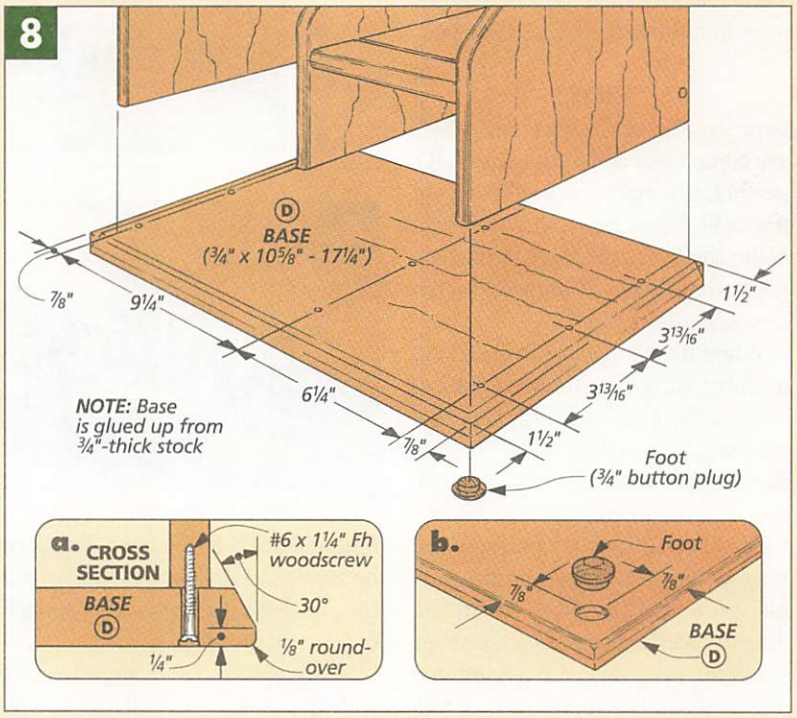

MATERIALS

A Vertical Panels (3)	½ x 10 - 10
B Shelf (1)	½ x 9⅜ - 6¼
C Back (1)	½ x 9 - 15
D Base (1)	¾ x 10⅝ - 17¼
E Drawer Front/Back (2)	½ x 3 5/16 - 5 11/16
F Drawer Sides (2)	¼ x 3 5/16 - 8⅝
G Drawer Bottom (1)	¼ ply. - 5 7/16 x 8⅝
H Drawer Dividers (2)	⅛ x 5 11/16 - 2⅛

CUTTING DIAGRAM

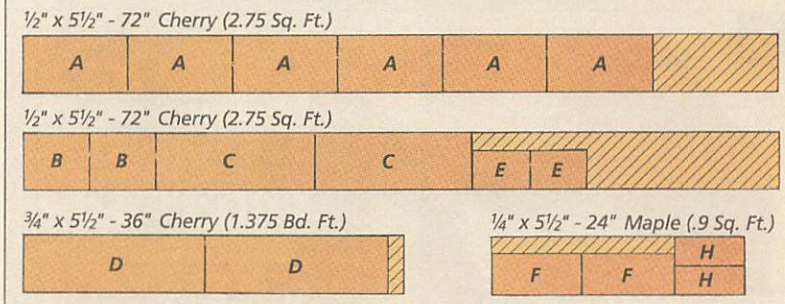

SUPPLIES

- (15) #6 x 1¼" Fh woodscrews
- (4) ⅜"-dia. End Grain Plugs
- (4) ¾"-dia. Button Plugs
- (1) 1"-dia. Knob w/Screw

DRAWER

With the cookbook rack complete, I built the small recipe drawer to fit in the opening under the shelf.

FRONT/BACK. To begin, I cut a **front** and a **back (E)** to size from ½"-thick stock, see the drawing at right. I sized these pieces to leave a 1/16" gap at the top and a 1/32" gap at each side. (My pieces were 3 5/16" x 5 11/16".)

Next, to hold the sides of the drawer, I cut ¼" x ¼" rabbets along both ends of the front and back pieces, see detail 'a' at right.

Then I cut an identical rabbet across the bottom of each piece to hold a ¼" plywood drawer bottom.

SIDES. At this point, the front and back pieces can be set aside, and two **sides (F)** can be cut to size, see drawing at right. I made the drawer sides out of ¼"-thick stock. (I like to use maple for drawer sides because it contrasts nicely with cherry.)

Like the front and back pieces, the sides are also rabbeted, see detail 'b' at right. But they're rabbeted only along their bottom edges, and the rabbet is only ⅛" deep.

After the rabbets are complete, I cut two grooves in each side piece, see drawing. These ⅛" x ⅛" dadoes are located 2⅞" from each end and will hold small dividers added later.

The last thing to do to the sides is cut the profile on the top edge of each, see drawing. This cutaway makes it easier to get at the recipe cards.

To create the cutaway, I laid out the profile on only one of the side pieces, see Fig. 9. Then I carpet taped the two sides together. This way, both pieces could be cut out on the band saw at the same time, and their edges could be sanded smooth, see Fig. 10.

BOTTOM. Now it's time to cut a bottom so the drawer can be assembled. To do this, I dry assembled the drawer and cut a **bottom (G)** to fit in the rabbets, see Fig. 11. (I used ¼"-thick cherry plywood to make this piece.)

DIVIDERS. With the bottom cut to size and the drawer glued up, I cut two **dividers (H)** to fit between the dadoes in the sides. These pieces are only ⅛"-thick maple and are cut to width so they end up flush with the cutaways on the sides.

Finally, I added a 1"-dia. knob, see Figs. 12 and 12a. But before attaching the knob to the front of the drawer, I applied two coats of an oil finish to the cookbook rack and painted the knob black. WW

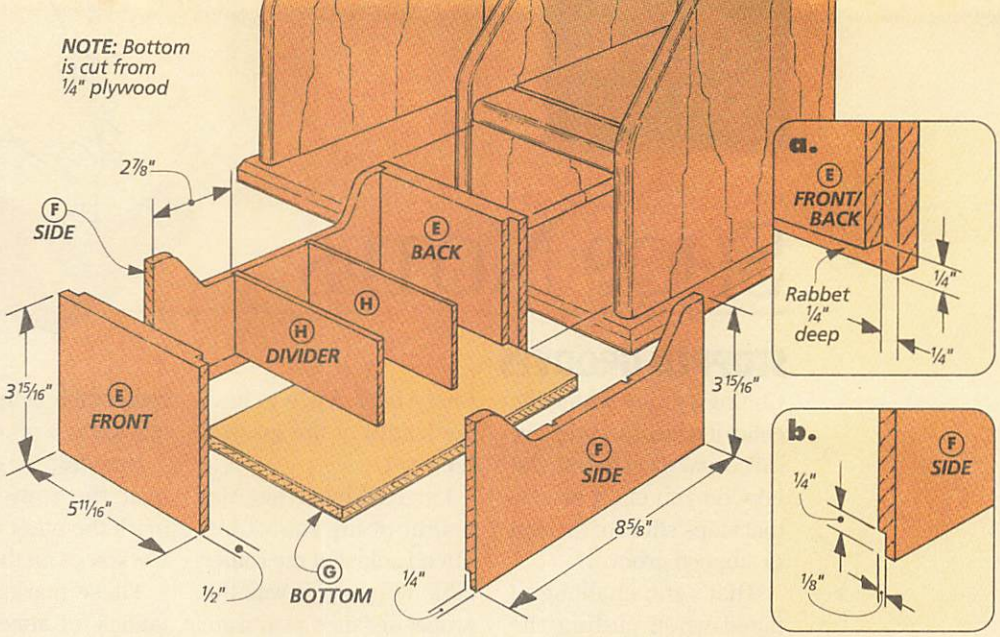

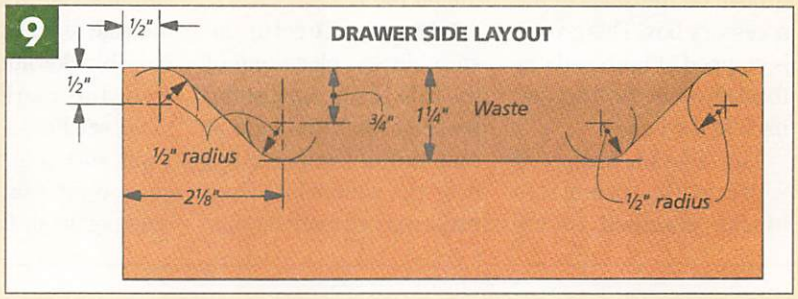

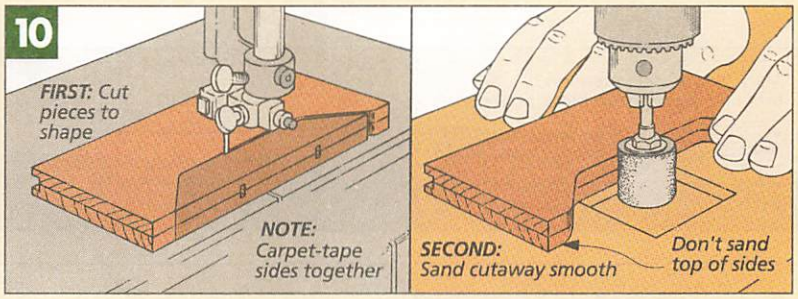

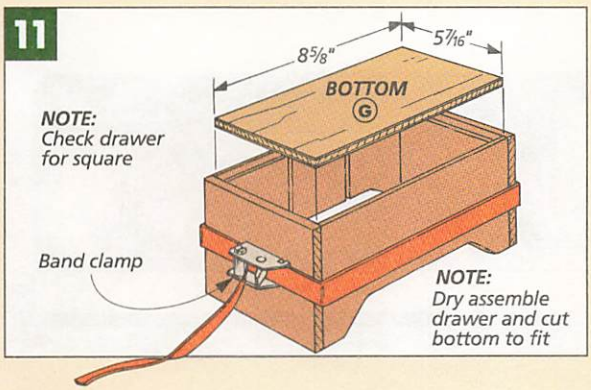

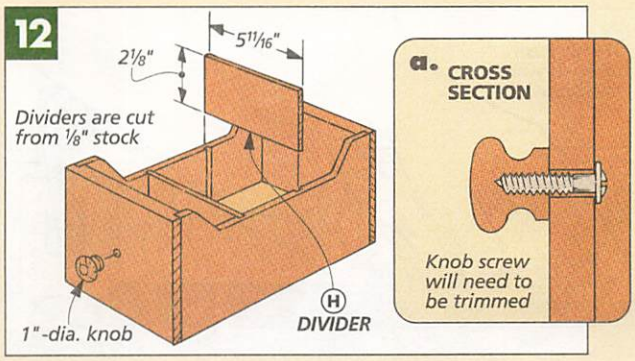

SHOP NOTES

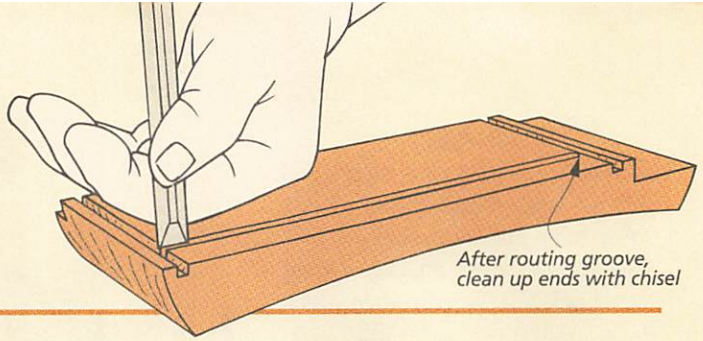

STOPPED GROOVES

Cutting a groove along the entire length of a workpiece isn't usually a problem. But how do you cut a groove that stops short of the end (a stopped groove)?

That's the challenge I faced when cutting the groove on the sides of the accessory box. This groove is stopped at both ends by the dadoes for the front and back of the box.

The solution I came up with is to use a pair of stop blocks clamped to my router table fence to limit the length of the groove, see Fig 1.

I started by setting the height of my router bit. Then I adjusted the router table fence so it was the proper distance away from the bit (3/8").

STOP BLOCKS. To set up the stop blocks, place one of the side pieces against the fence so that the dado at one end of the piece fits over the router bit. Then make a pencil mark on your router table at the opposite end of the workpiece.

Now drop the other dado over the router bit and mark the other end of the workpiece on the table.

These marks serve as guides for attaching your stop blocks. Just to be on the safe side, I placed my stop blocks about 1/8" in from the marks on the table, see Fig 1a. That way I was sure that I wouldn't cut too far past the stopping points for the groove.

To rout the groove, I carefully lowered the workpiece down over the rotating bit, see Figs. 2 and 2a. I pulled the workpiece back until it hit the first stop.

Then I pushed the workpiece forward until it hit the other stop, see Figs. 3 and 3a. Finally, I used a chisel to clean up the ends of the groove, see drawing above.

Note: You'll have to readjust the stop blocks in order to cut the groove on the other side of the box.

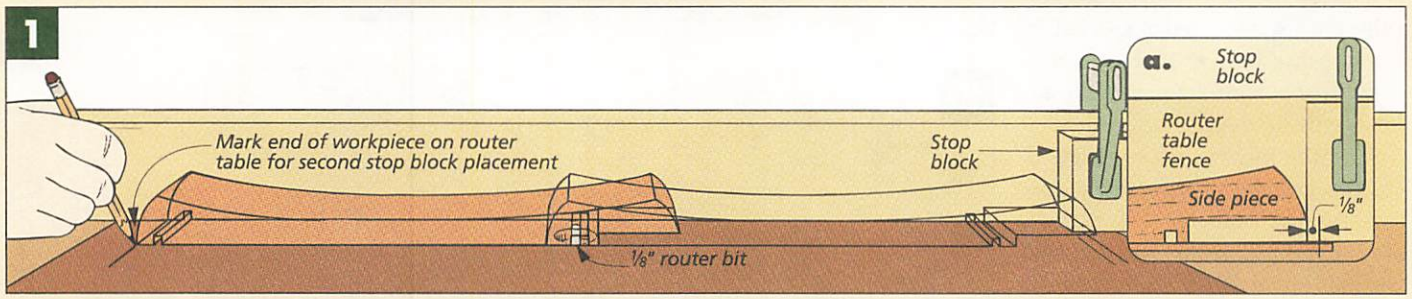

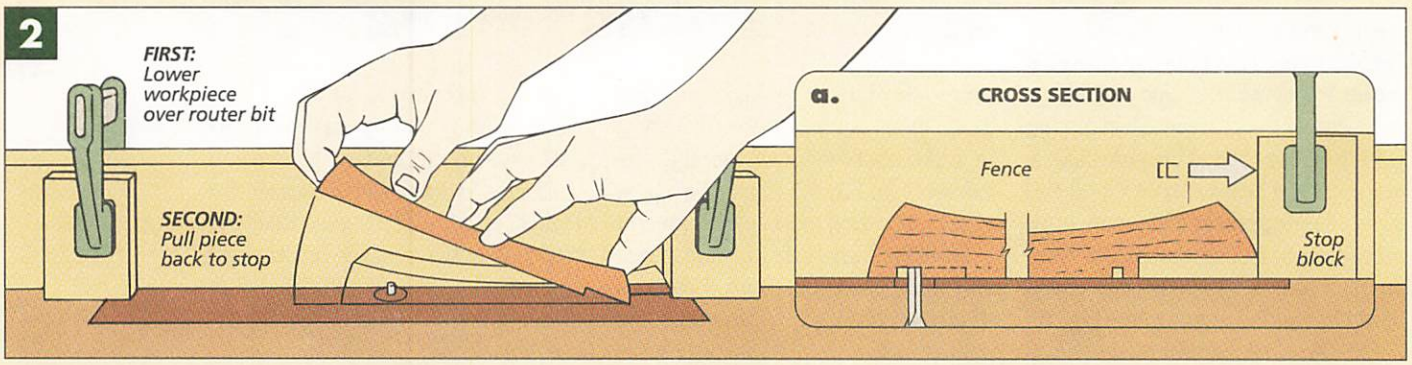

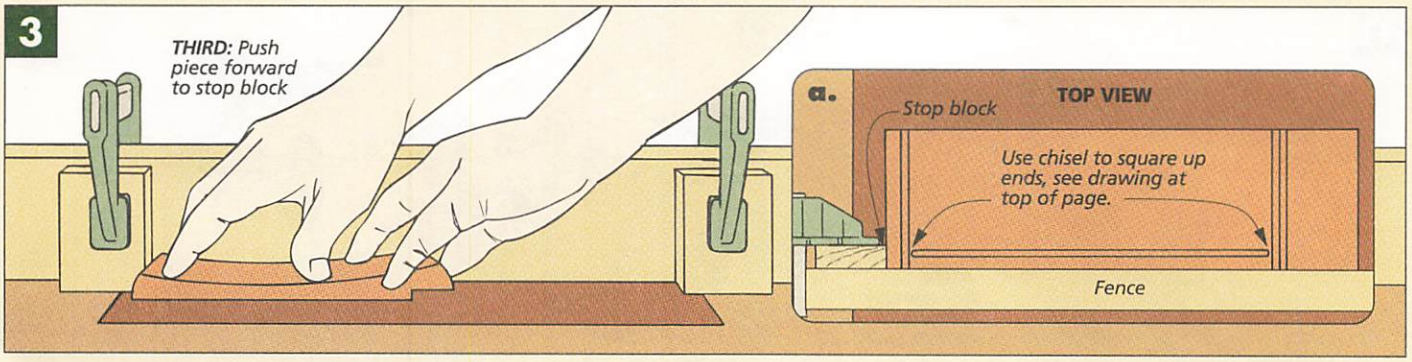

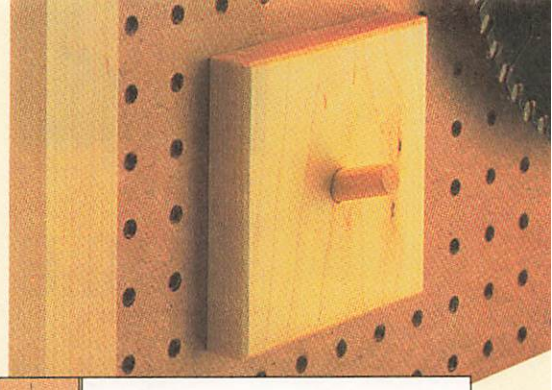

SAW STAND ACCESSORY HANGERS

The table saw stand on page 20 includes a couple of pegboard sliding racks to hang saw blades and accessories. But instead of using common pegboard hooks (which tend to fall off), I made my own accessory hangers that attach securely to the pegboard.

Each hanger is just a square piece of 3/4"-thick stock with an angled hole drilled in the center. Then a short dowel is glued into the hole, see Fig 1.

I made two different sizes of hangers. That way, I was able to mount the smaller size to one side of the pegboard and then attach the larger size to the opposite side, see Fig. 1a.

To mount the hangers, I inserted screws through the holes in the pegboard and then into the back of the hanger at each corner.

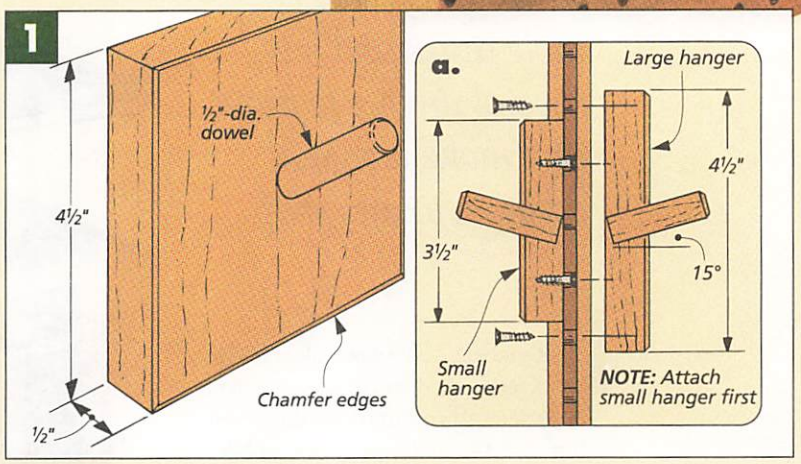

WORKING WITH LEATHER

Cutting and fitting the leather for the accessory box on page 28 can be a little tricky. Unlike wood, leather can stretch, making it difficult to get straight, square cuts.

TEMPLATES. To get a good fit, it's important to cut the leather to the exact size on the first attempt. So I made some templates out of hardboard. I started with them oversize and then trimmed them until they fit.

I made one template for the two pieces of leather on the bottom of the box. The only problem is getting the template out of the box once you get it to the right size. To do this, I glued on a small handle.

For the lid, I needed two templates: one for the outside edge and another for the inside cutout. There's no need for handles here, because the lid is shallow.

To cut the leather, I used a utility knife with a new blade. I held the template firmly in place and then made several passes on each side until I cut all the way through the leather, see Fig. 2.

Try to avoid "pulling" the knife through the cuts or else you might tear the leather. Note: It's a good idea to place a piece of posterboard or cardboard underneath the leather before you start cutting.

GLUE. With the leather cut, I glued it in place. But I used liquid hide glue rather than yellow glue (see box below). I applied the glue to the box instead of the leather to avoid accidentally getting adhesive on the good side of the leather.

Finally, to get the leather into the corners on the inside of the box, I used the end of a steel ruler.

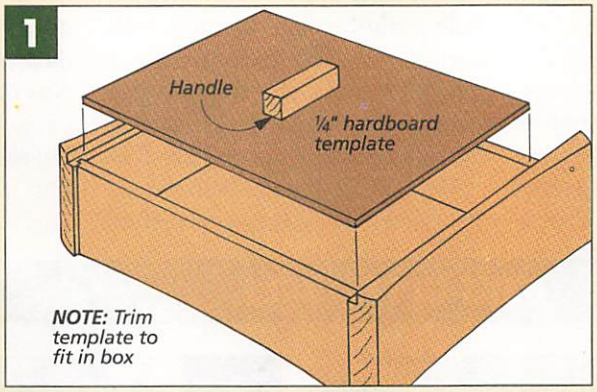

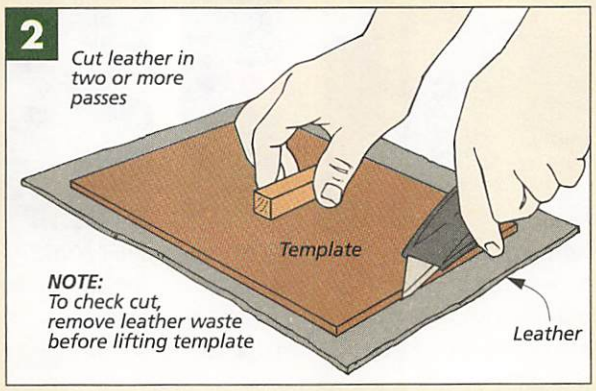

LIQUID HIDE GLUE

When gluing the leather to the accessory box, I didn't want the glue to set up before I could get the leather in place. To avoid this problem, I used a liquid hide glue.

Unlike synthetic (yellow or white) glues, liquid hide glue is made from boiled-down animal hides. But it doesn't require any melting or heating like older hide glues.

And compared to synthetic glues, liquid hide glue sets up rather slowly. This gives you plenty of time to position the leather exactly where you want it.

TABLE SAW STAND

This sturdy, mobile table saw stand has several unique features that make it a great addition to any shop.

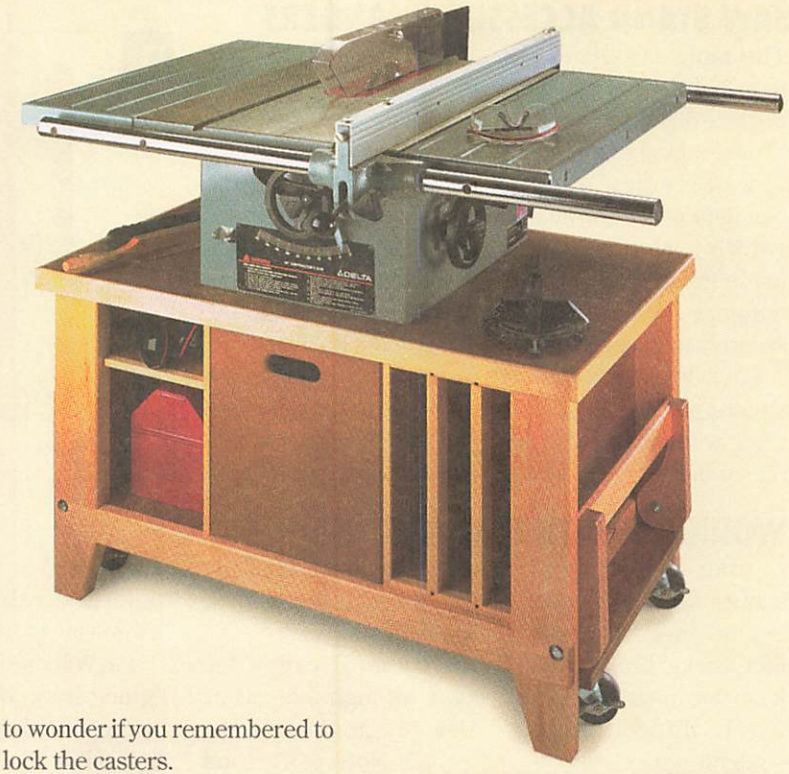

Let's face it. Table saws take up a lot of room. And since shop space is always at a premium, we designed this stand so that it would be mobile. This way, it can be rolled out of the way when you need some extra floor space (or need to park your car).

MOBILITY. Mobility isn't hard to add to a tool stand — just add casters to the base and away you go.

I added four swivel casters to this stand. This allows it to turn on a dime. You can move it front-to-back or side-to-side without a problem, and you can roll the stand in and out of tight spaces quite easily.

Of course, adding mobility creates another problem — getting the stand *not* to move. Casters tend to reduce the stability of the stand. And the last thing you want when pushing a sheet of plywood through the saw blade is to wonder if you remembered to lock the casters.

STABILITY. Making the saw stable was as easy as making it mobile. I simply built a sturdy frame with four wide corner posts. The thick hard maple and MDF make the frame heavy enough to dampen vibration, and half lap joinery holds it securely together.

But how do you get both the stability and mobility to work together?

The key is retractable casters. To engage the casters, simply step down on a cam bar, see left photo below. Now the stand can be wheeled around easily. When the saw is in position, just lift the cams to retract the wheels. This puts all the weight of the stand (and saw) on the four corner posts.

BUILT-IN FEATURES

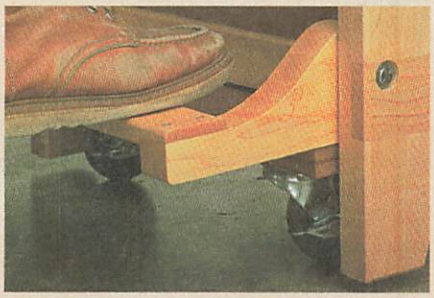

Cam-activated Casters. *There's no better way to "create" space in a small shop than to make a tool mobile. This stand rolls around on cam-activated casters.*

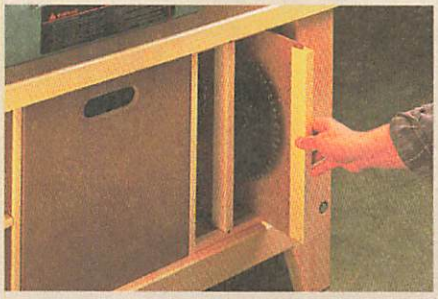

Sliding Racks. *There's plenty of storage space with this stand. On one end, we included two sliding storage racks. To make the special hangers, see page 19.*

Dust Bin. *Table saws create a lot of sawdust. So we designed this simple dust bin so you won't need to spend as much time sweeping up your shop.*

Construction Details

OVERALL DIMENSIONS:
42½"W x 24½"D x 23¾"H

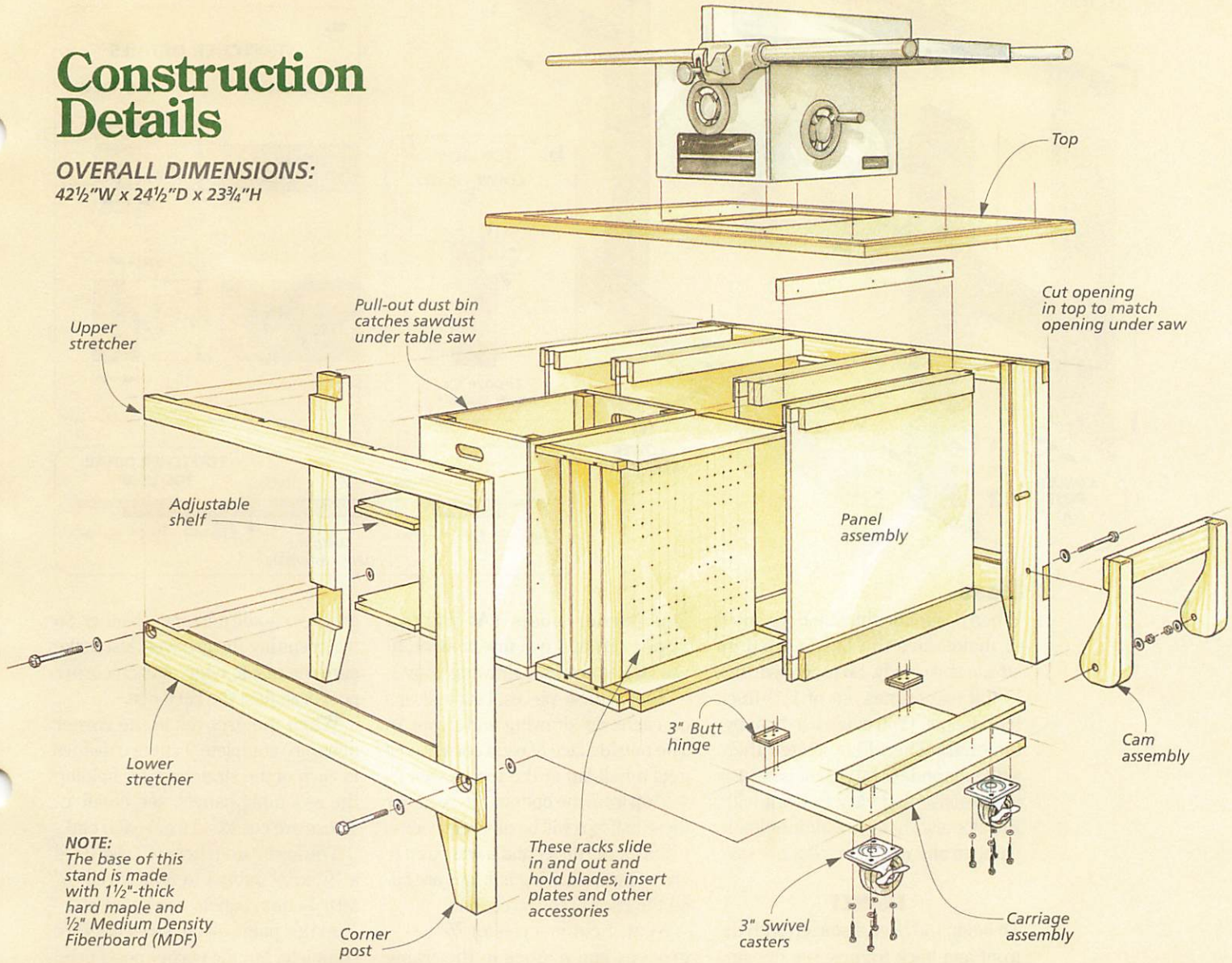

NOTE:
The base of this stand is made with 1½"-thick hard maple and ½" Medium Density Fiberboard (MDF)

Side View Section

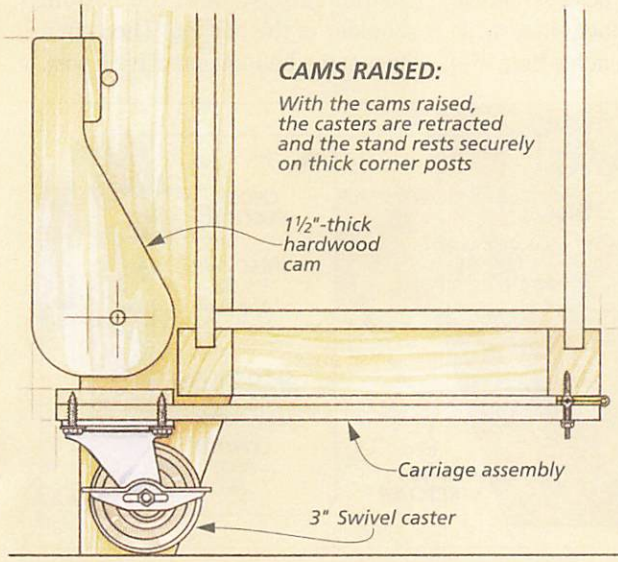

CAMS RAISED:
With the cams raised, the casters are retracted and the stand rests securely on thick corner posts

Side View Section

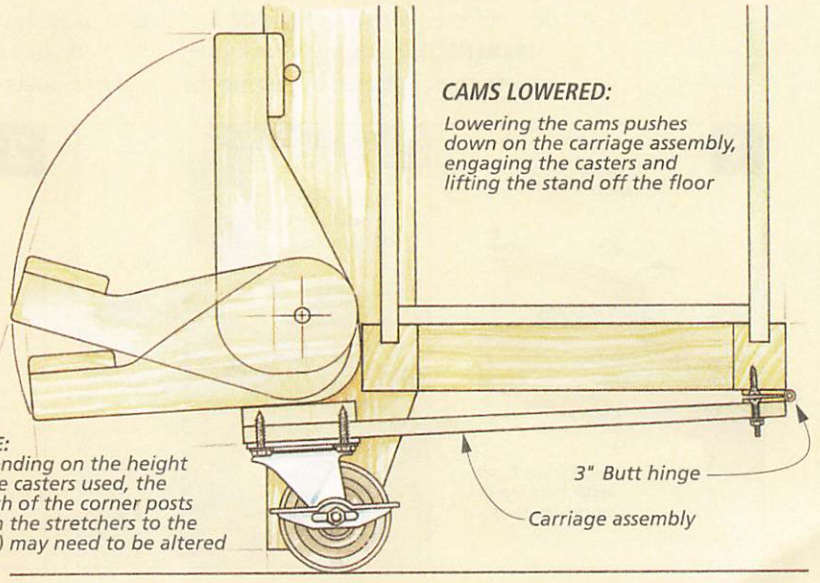

CAMS LOWERED:
Lowering the cams pushes down on the carriage assembly, engaging the casters and lifting the stand off the floor

NOTE:
Depending on the height of the casters used, the length of the corner posts (from the stretchers to the floor) may need to be altered

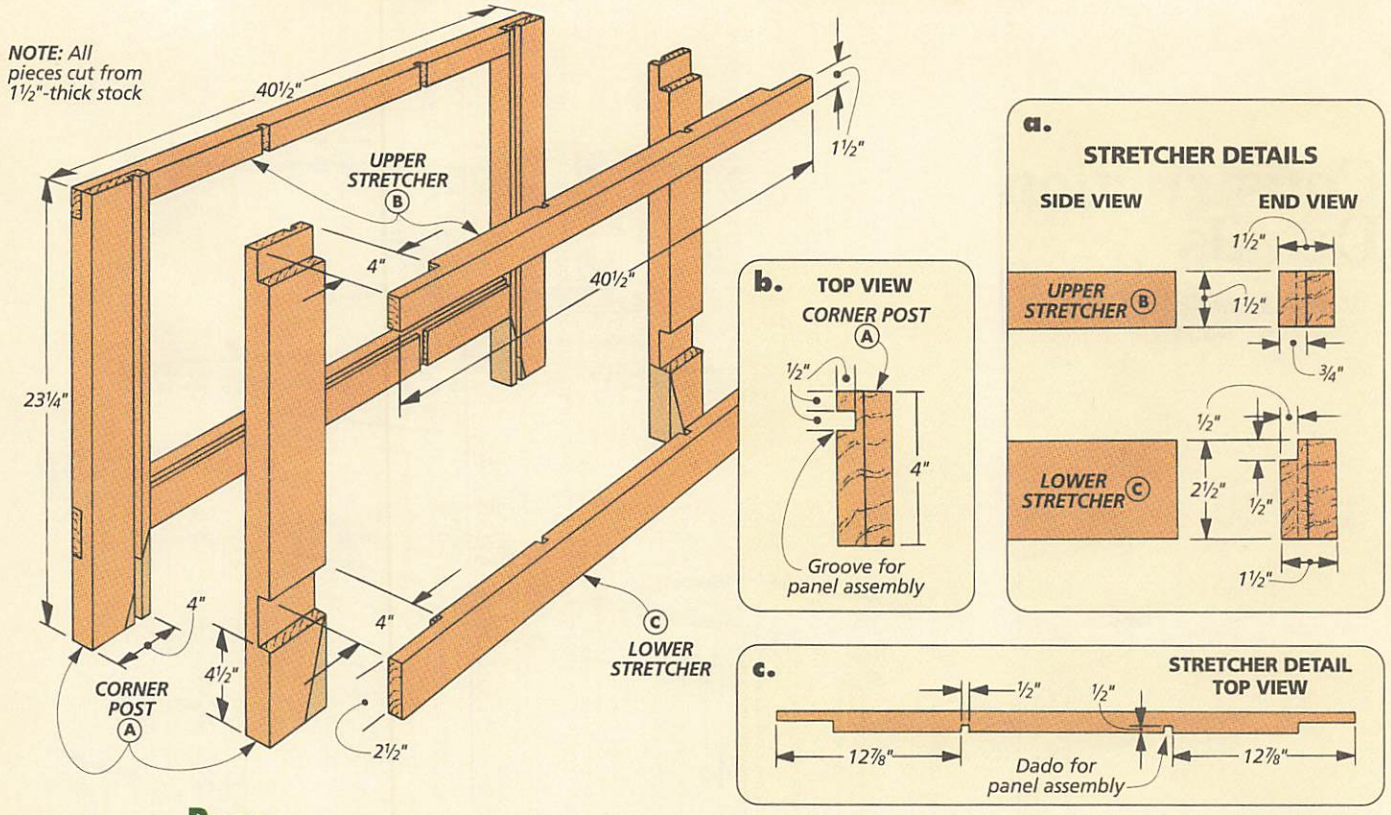

Base

When designing this stand, I wanted to make sure the base ended up strong and sturdy. So to achieve this, I built two frames out of 1½"-thick hard maple. (You could use "two-by" material.) Then I connected them with rails and ½" MDF panels. MDF is inexpensive and easy to work with. But it's also heavy, which helps to dampen any vibration from the saw.

FRAMES

To begin the base, I started with the front and back frames, see drawing above. Each frame consists of two corner posts connected with two stretchers. Later, the two frames will be connected with panel assemblies.

FRAME PIECES. To make the front and back frames, I started by cutting the four **corner posts (A)** and two **upper (B)** and two **lower stretchers (C)** to size, see drawing above.

To join these pieces, I cut half laps on each, see drawing and detail 'c'. The outside face of each corner post gets a half lap at the top as well as 4½" up from the bottom. (Remember these half laps will be different widths to match the upper and lower stretchers.) Then matching half laps are cut on the ends of the stretchers.

Next, I cut a series of ½" x ½" grooves and dadoes in the frame pieces to hold the panel assemblies that will connect the two frames.

First, I cut a groove on the inside face of each corner post, see detail 'b'. Note: Just remember, since these corner posts face each other, the grooves should mirror each other. So when cutting the grooves, just make sure the inside edge of each corner post is against the rip fence.

When the grooves in the corner posts are complete, I cut two dadoes in each of the stretchers for holding the assembly panels, see detail 'c'. These are cut 12⅞" from each end.

The lower stretchers (C) also need a ½" x ½" rabbet to hold three ½" MDF bottom panels, see detail 'a'.

At this point, all the stretchers are complete, but the corner posts need a little more work. First, I glued a plug into the groove in the bottom of the corner post, see Fig. 1. This plug is positioned flush with the bottom shoulder of the half lap. Then cut a taper at the bottom end of each post.

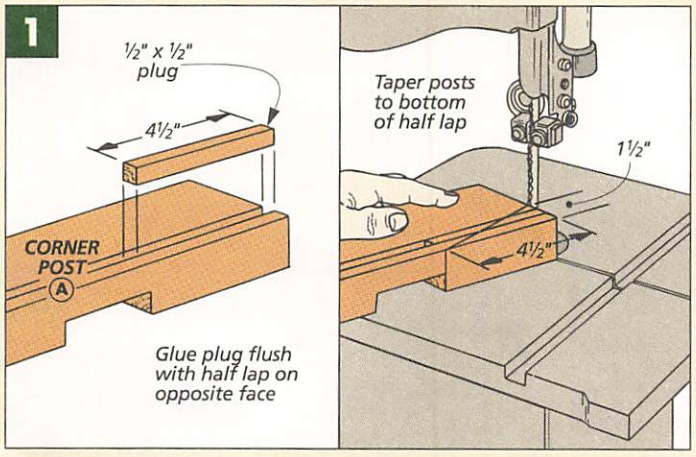

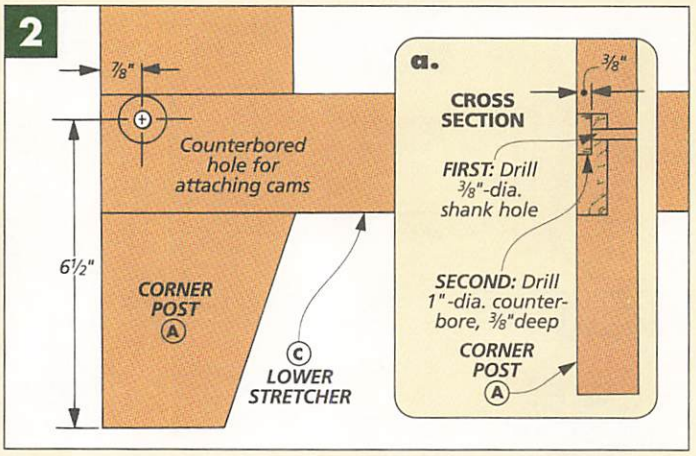

Now the front and back frames can be assembled. And when the glue's dry, a counterbored pilot hole can be drilled through the lower stretchers (and corner posts), see Fig. 2. These holes are for attaching the cams that will raise and lower the casters.

PANEL ASSEMBLIES

To connect the frames, I built four panel assemblies, see drawing at right. Each consists of an upper and lower rail and a panel.

RAILS. I started by cutting four **upper (D)** and four **lower rails (E)** to size. These pieces are identical except for their widths.

To hold the panel between the rails, I cut a ½" x ½" groove centered on the inside edge of each rail. Then stub tenons can be cut on each end to fit the grooves and dadoes in the frames.

PANELS. The four **vertical panels (F)** that fit between these rails are cut from ½" MDF, and their lengths match the full length of the rails, including the stub tenons. To find their heights, measure between the stretchers on the frames and add 1" for the grooves. (In my case, these measure 15¾" tall.)

With the panels cut to size, the only thing left is to drill three sets of ¼"-dia. holes ⅜" deep in one face of each panel. These are for the shelf pins that will hold an optional shelf later.

Now the panel assemblies can be glued together. And when the glue is dry, I connected the frames with the four panel assemblies. (The holes should face each other in the outside sections, see drawing.)

At this point, there are just a couple things left to do. First, I applied a piece of ¼"-thick maple **panel edging (G)** to each exposed edge of the vertical panels, see Fig. 3.

Then I cut three MDF panels for the bottom of the base, see Fig. 4. The **center panel (H)** is simply cut to fit the center opening and glued in place. The **outer bottom panels (I)** require an extra step. Their outside corners have to be notched to fit around the corner posts, see Fig. 4a.

To complete the base, rout or sand small chamfers along all the exposed corners, except the top edge.

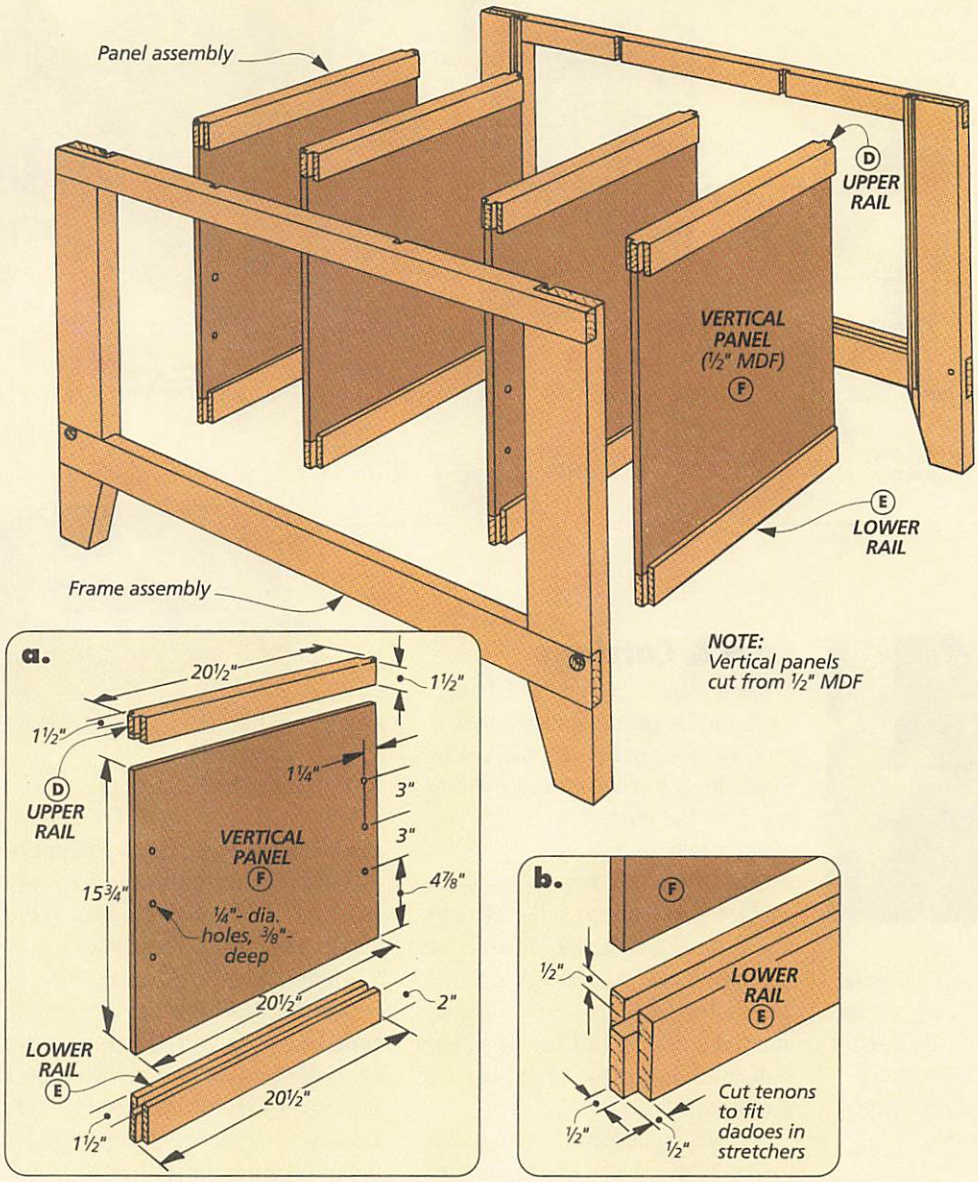

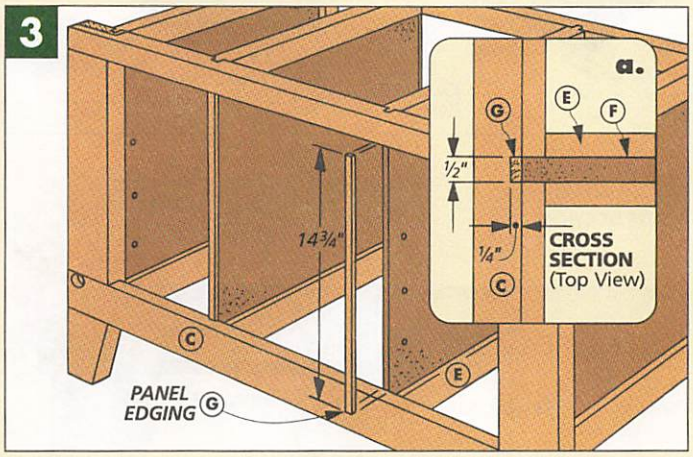

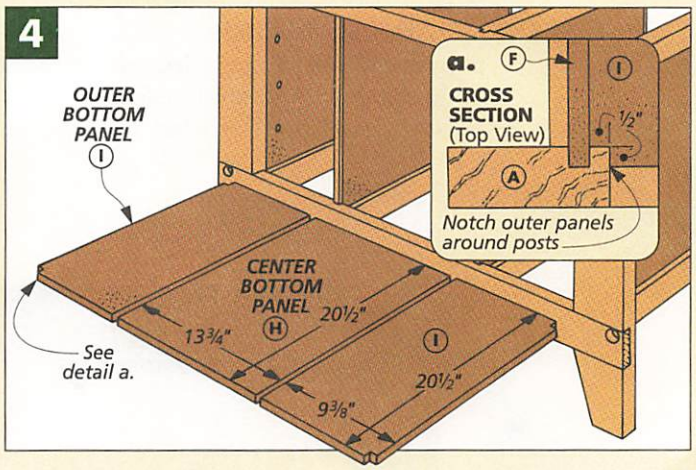

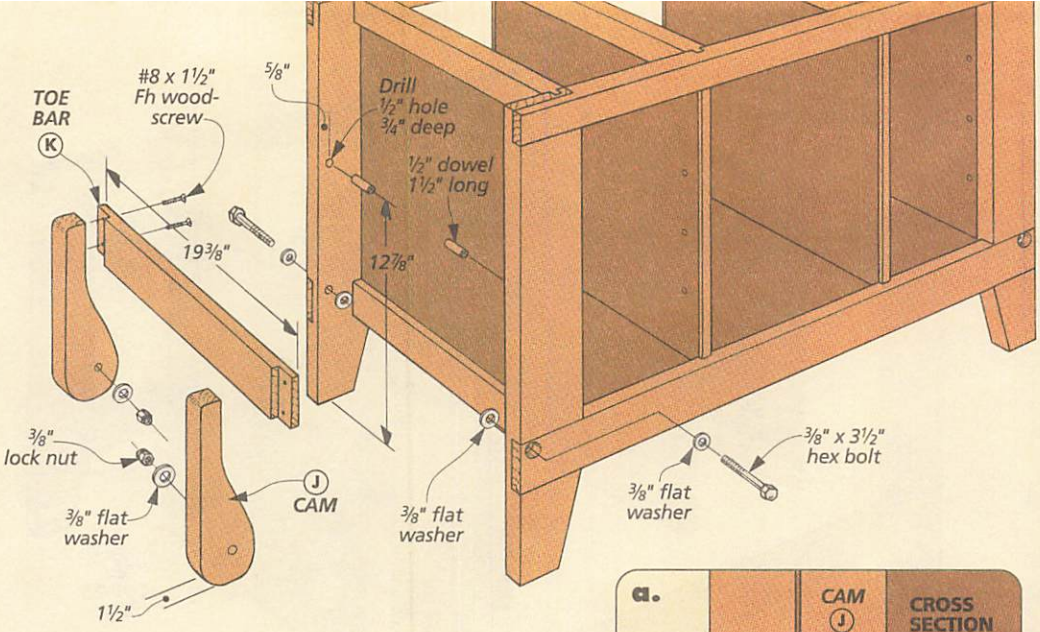

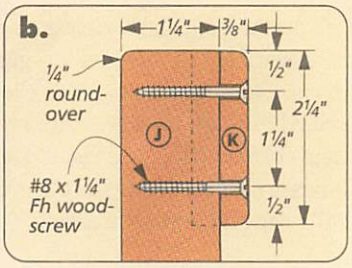

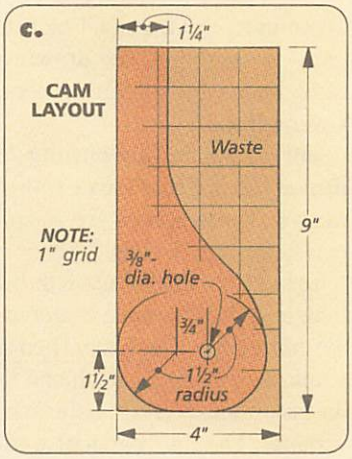

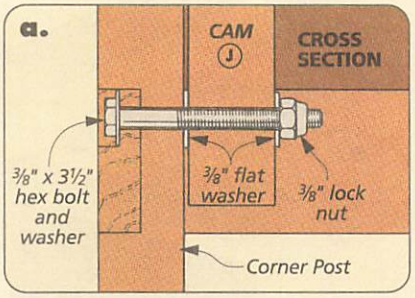

▲ *To engage the casters (and raise the stand), all you need to do is step down on the toe bar of each cam assembly.*

Cam & Carriage

With the base complete, I began work on the cam and carriage system. The idea here is simple, really. The cams lower the carriage which engages the casters (and lifts the stand off the floor).

CAMS. There are four cams for the cabinet, two on each side, see drawing above. I cut the 1½"-thick **cams (J)** from 4" x 9" blanks, see detail 'c'. Then after the cams were cut out and sanded smooth, I drilled a ⅜"-dia. hole in each cam for a hexhead bolt it will pivot on.

TOE BARS. Next, I made **toe bars (K)** out of ¾"-thick stock, see drawing. These pieces simply connect the two cams. To find their lengths, measure between the corner posts and subtract the thickness of two washers (about ⅛" total).

With the toe bars cut to size, I cut half laps on each end. Then I routed a ¼" roundover on the outside edges of the toe bars and cams, see detail 'b'.

The bars are glued and screwed to the cams. When the glue is dry, soften the sharp edges of the cam assemblies with sandpaper. Then attach the assemblies to the base, see detail 'a'.

Before going on to the carriage assembly, I added a ½" dowel to the inside of each post. This dowel acts as a simple stop for the cams.

CARRIAGE. Now the carriage can be added, see Fig. 5. To begin, cut two **carriage panels (L)** and two **caster supports (M)** to size from ½" MDF. But note that the important thing for the caster supports is that they match the base plates on your casters.

The caster supports are simply glued to the top of the carriage panels. After the glue is dry, the casters can be screwed in place with lag screws, see drawing below.

Then to mount each carriage, I used a pair of 3" butt hinges. But the screws provided for the hinges won't hold well in the MDF, so to attach the hinge to the carriage, I used 1"-long machine screws with nuts and lock washers, see Fig. 5a.

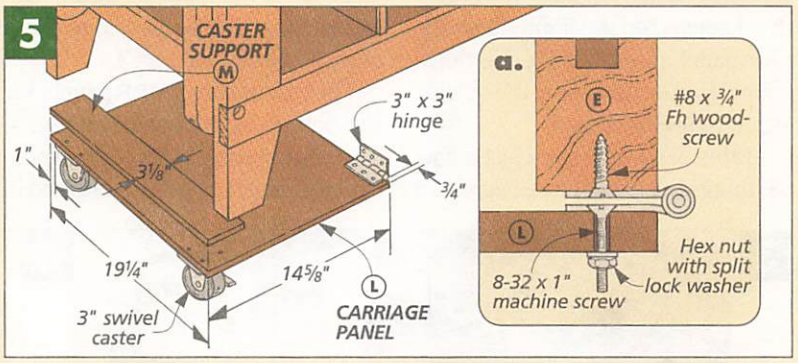

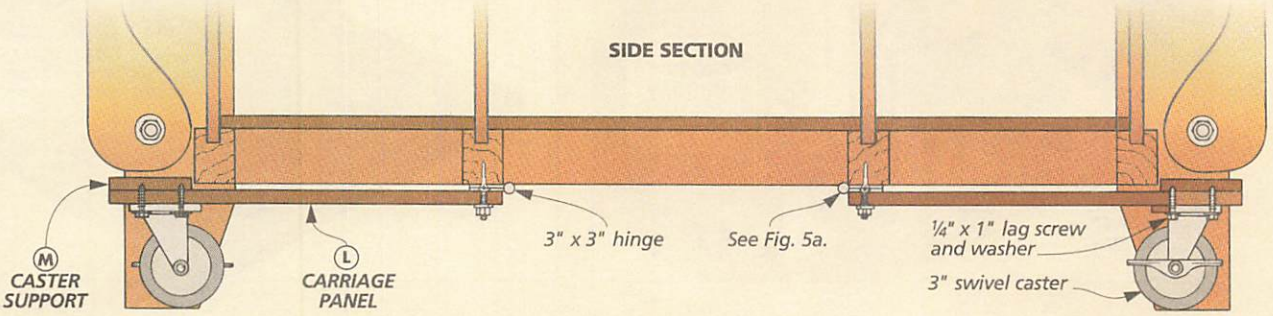

Dust Bin

With the base of the stand complete, I began work on a dust bin that fits in the center section, see photo at right.

FRONT/BACK. To build the dust bin, I started with the **front** and **back (N)**. I sized these pieces to fit the center opening — they're 1/8" shorter and 1/8" narrower, see drawing.

To keep the weight of the bin down, I decided to use 1/4"-thick hardboard for the sides. So to hold these pieces, I cut 1/4"-deep rabbets in the front and back pieces, see drawing and detail 'a'. Then to hold an MDF bottom panel, I cut a 1/2"-wide rabbet along the bottom of these pieces, see detail 'c'.

Now to make the bin easy to carry, I cut out some handles, see detail 'b'. I did this by drilling a couple 1 1/4"-dia. holes in the front and back pieces and then removing the waste with a sabre saw. To make the handles comfortable, round over the inside and outside edges with a 1/4" round-over bit.

CLEATS. With the front and back pieces complete, I added 3/4" x 3/4" hardwood **cleats (O)** to strengthen the corners of the bin, see drawing and detail 'a'. Each cleat extends from the top of the bin to the rabbet for the bottom and is glued flush with the rabbets that hold the sides.

SIDES. Now the 1/4" hardboard **sides (P)** can be cut to size. To find their length, measure from the inside edge of the upper rail (B) to the front edge of the edging strips (H). Then subtract 1/2" for the rabbets on the front and back. (My sides were 19 3/4"-long.)

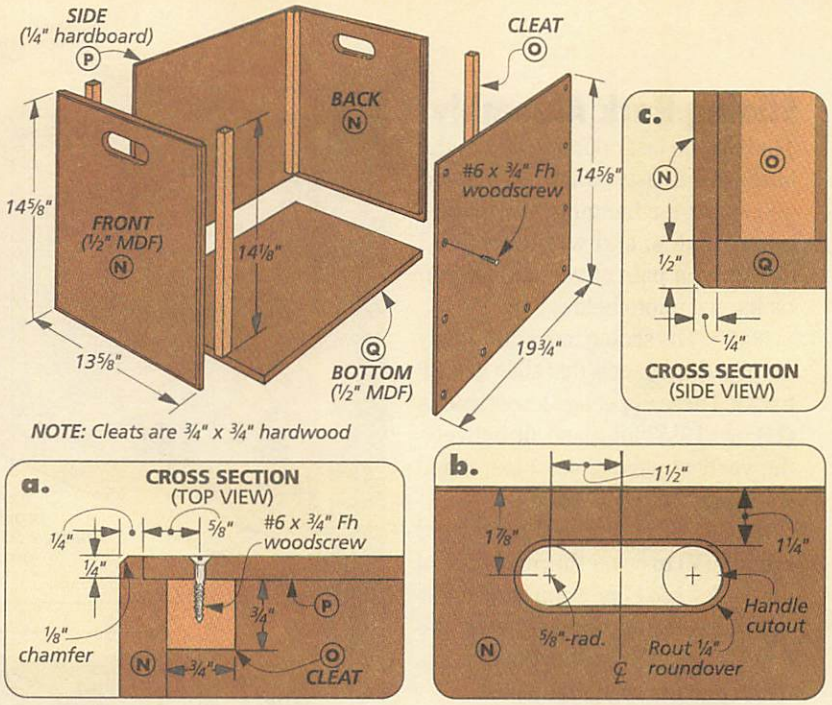

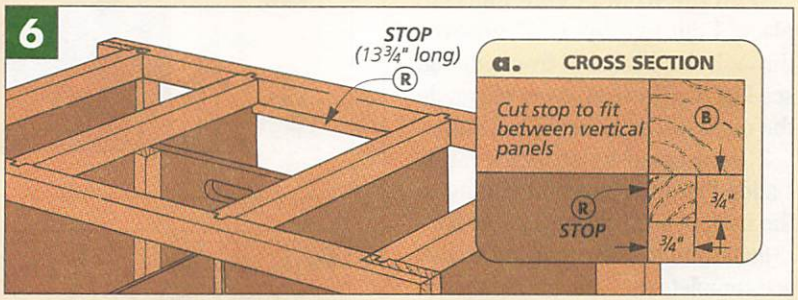

▲ *Clean up is made a bit easier with the help of this pull-out dust bin.*

At this point the sides are ready to be attached. They're simply glued to the front and back pieces and screwed to the hardwood cleats, see detail 'a'.

BOTTOM. The last piece to add is the **bottom (Q)**. This 1/2" MDF panel is cut to fit in the opening under the bin. It's glued into the rabbets and screwed through the sides.

Finally, I routed a 1/8" chamfer around the front and back faces.

STOP. The only problem now is that there's nothing to prevent the bin from sliding out the back. So I added a 3/4" x 3/4" **stop (R)** to the stand, see Fig. 6. This piece is cut to fit between the vertical panels. (Mine was 13 3/4" long.) Then it's glued to the bottom of the back upper stretcher (B) flush with its inside edge, see Fig. 6a.

Adjustable Shelf

To add storage, I made a shelf for one of the side openings. It will rest on pins that fit into the holes you already drilled in the vertical panels in the base, see Figs. 7 and 7a.

The **shelf panel (S)** is cut from 1/2" MDF to fit snug between the posts. But I allowed a 1/16" gap on each side so it can be adjusted easily, see Fig. 7a.

Next, I added a strip of **edging (T)** to the shelf. This 3/4"-wide edging is cut shorter than the width of the shelf panel, see Fig. 7b. This automatically creates a notch that will allow the shelf to fit around the corner posts.

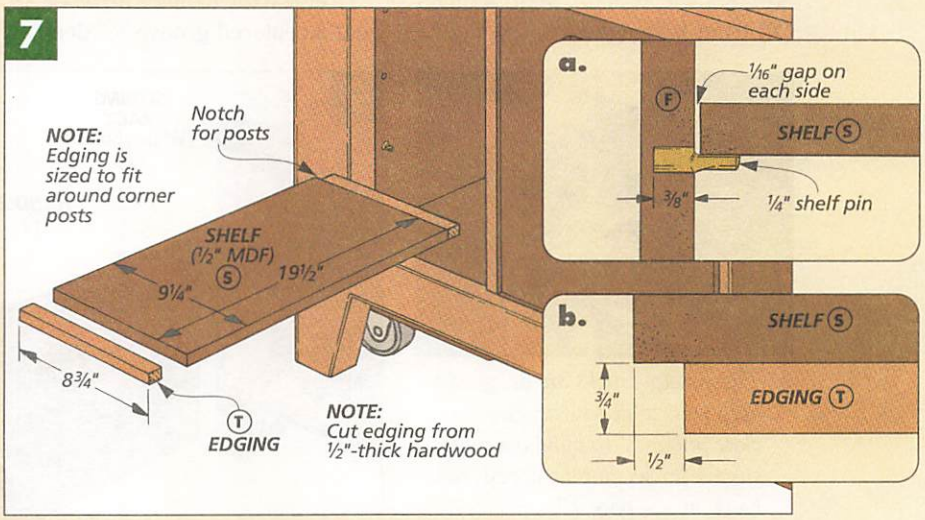

Sliding Rack Assembly

There's one last option to add to the inside of the base. I wanted some storage space for hanging saw blades, insert plates, and wrenches, so I designed a pair of vertical sliding racks, see photo below.

TRACKS. The sliding racks are simply 1/4" pegboard panels that slide in MDF tracks. These upper and lower **tracks (U)** are 19 1/2" long and fit between the vertical panels, see Figs. 8 and 8a. (Mine were 9 3/8" wide.)

EDGING. Next, I added hardwood **edging (V)** to cover the *front* edge of the tracks, see Figs. 8 and 8a. But this 3/4"-wide edging doesn't cover the entire edge; it's cut short to create a notch that fits around the post.

With the front edging glued in place, I cut two 1/4" x 1/4" grooves through the track and front edging, see Fig. 8a. These grooves will guide the racks as they slide in and out.

Then to create a stop for the racks, I added another piece of edging to the back of each track, see Fig. 8a.

INSTALLATION. Now that the tracks are complete they can be installed in the base. The lower track is easy to install. It's simply screwed to the outer bottom panel (I), see Fig. 8.

But at this point, there's nothing to screw the upper track to. So I added a pair of **track cleats (W)**, see Figs. 8 and 8b. These are 1 1/2"-wide (tall) hardwood strips that are cut to fit between the stretchers (B) and screwed to the rails (D). Now, the upper track can be screwed in place.

SLIDING RACKS. Now that the tracks are complete, I cut two **sliding racks (X)** from 1/4" pegboard, see Fig. 9. These racks are cut to size so they slide smoothly in the tracks. (Mine were 14 1/4" x 19 1/2".)

HANDLES. Then I added a 3/4"-thick hardwood **handle (Y)** to the front of each rack, see Figs. 9 and 9a.

To attach the handles to the racks, I cut a centered groove 3/4" deep on each handle, see Fig. 9a. Then I glued them to the racks so there was a 1/4" at both the top and bottom so the handle would clear the track, see Fig. 9b.

Finally, to hold the accessories on the racks, I designed some hangers. For more on building these simple hangers, see page 19.

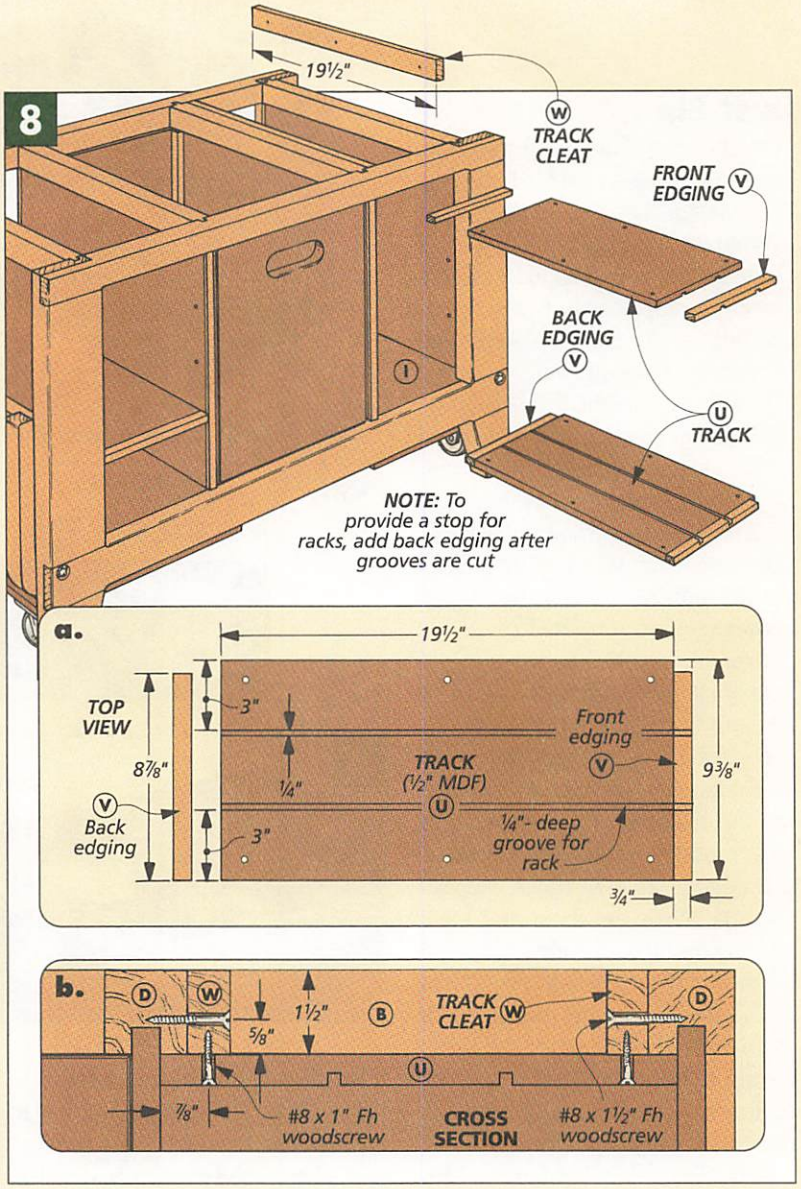

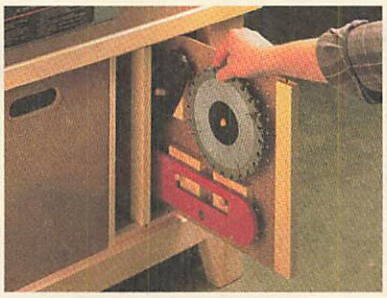

▲ *These sliding racks are designed to keep your table saw accessories close at hand. To build the simple storage hooks that the accessories hang on, see page 19.*

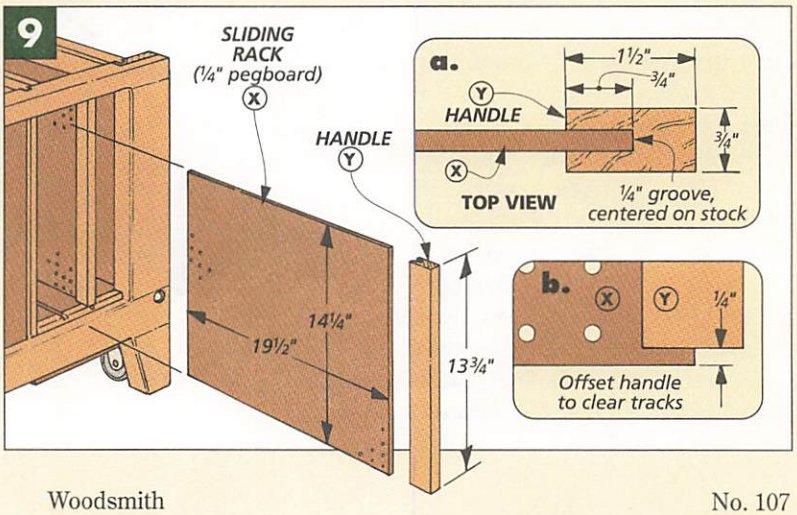

Top

All that's left for this stand is to put a top on, see drawing at right. I used an MDF panel for the top and added hardwood edging.

TOP PANEL. To make the **top (Z)**, the first thing I did was to cut an MDF panel to finished size (41¾" x 23¾"), see drawing at right.

With the top cut, I laid out and cut the opening over the dust bin, see detail 'b'. To do this, I hoisted my table saw in place. (I positioned my saw so the motor cleared the back edge, and centered the saw side-to-side.) Then I traced along the inside of the saw.

Next, I removed the table saw and drilled holes in each corner of the layout. These holes allowed me to remove the waste with a sabre saw.

EDGING. To protect the edges of the top, I decided to add ¾" hardwood **edging (AA, BB)**. I made this edging 1½" wide, so it's a little wider than the thickness of the MDF, see drawing and detail 'a' above.

To help align the edging to the top, I cut a ⅜"-deep rabbet on each piece of edging, see detail 'a.' Then the edging pieces can be mitered to length.

When the edging is attached, I routed a ⅛" chamfer around both the top and bottom edges. Then I centered the top on the base and screwed it to the upper rails (D). W

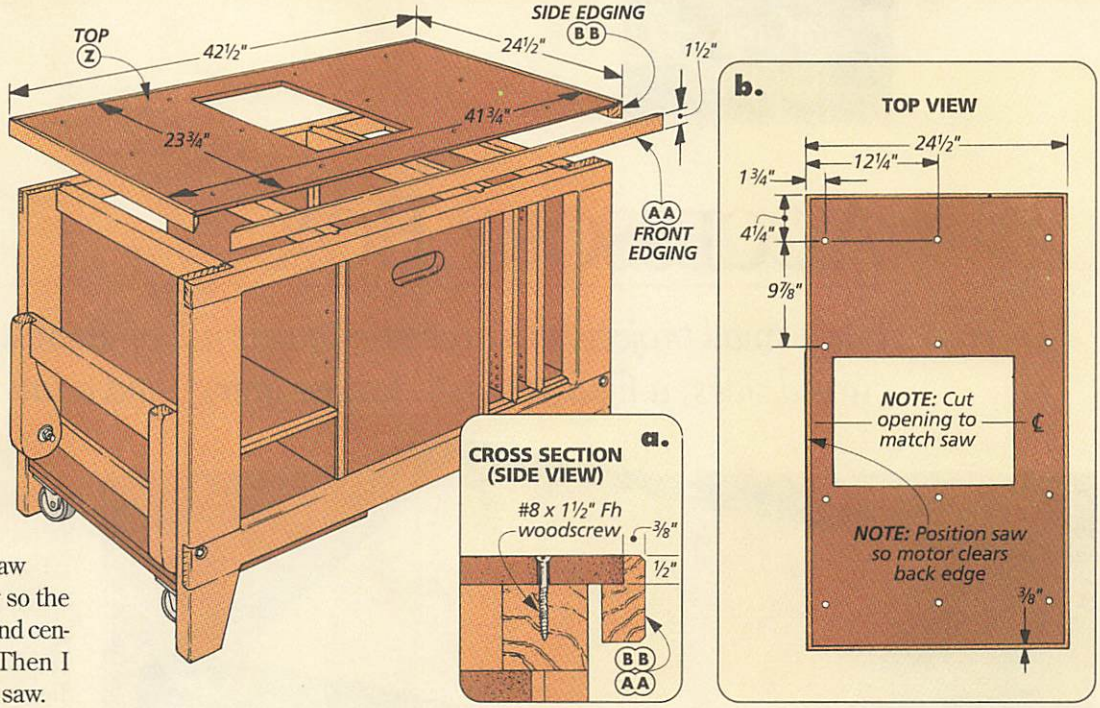

MATERIALS

A	Corner Posts (4)	1½ x 4 - 23¼
B	Upr. Stretchers (2)	1½ x 1½ - 40½
C	Lwr. Stretchers (2)	1½ x 2½ - 40½
D	Upr. Rails (4)	1½ x 1½ - 20½
E	Lwr. Rails (4)	1½ x 2 - 20½
F	Vert. Panels (4)	½ MDF - 15¾ x 20½
G	Vert. Pnl. Edging (4)	¼ x ½ - 14¾
H	Ctr. Btm. Panel (1)	½ MDF - 13¾ x 20½
I	Otr. Btm. Panels (2)	½ MDF - 9⅜ x 20½
J	Cams (4)	1½ x 3¾ - 9
K	Toe Bars (2)	¾ x 2¼ - 19⅜
L	Carriage Panels (2)	½ MDF - 14⅝ x 19¼
M	Caster Supports (2)	½ MDF - 3⅛ x 19¼
N	Bin Ft./Bk. (2)	½ MDF - 13⅝ x 14⅝
O	Bin Cleats (4)	¾ x ¾ - 14⅛
P	Bin Sides (2)	¼ Hdbd. - 14⅝ x 19¾
Q	Bin Btm. (1)	½ MDF - 13⅛ x 19¾
R	Bin Stop (1)	¾ x ¾ - 13¾
S	Shelf Panel (1)	½ MDF - 9¼ x 19½
T	Shelf Edging (2)	½ x ¾ - 8¾
U	Tracks (2)	½ MDF - 9⅜ x 19½
V	Track Edging (4)	½ x ¾ - 8⅞
W	Track Cleats (2)	¾ x 1½ - 19½
X	Sliding Racks (2)	¼ Pegbd. - 14¼ x 19½
Y	Rack Handles (2)	¾ x 1½ - 13¾
Z	Top (1)	½ MDF - 23¾ x 41¾
AA	Fr./Bk. Edging (2)	¾ x 1½ - 42½
BB	Side Edging (2)	¾ x 1½ - 24½

CUTTING DIAGRAM

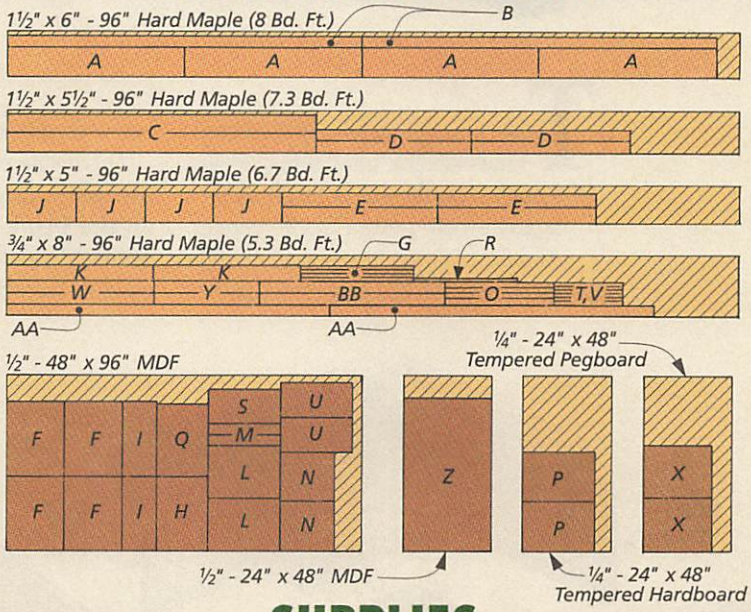

SUPPLIES

- (4) ½"-dia. dowels 1½" long
- (4) 3" Swivel Casters
- (16) ¼" x 1" Lag Screws
- (16) ¼" Flat Washers
- (4) 3" Butt Hinges w/Screws
- (12) 8-32 x 1" Fh Machine Screws
- (12) #10 Split Lock Washers
- (12) 8-32 Hex Nuts
- (4) ⅜" x 3½" Hex Bolts
- (12) ⅜" Flat Washers
- (4) ⅜" Hex Lock Nuts
- (16) #8 x 1½" Fh woodscrews
- (4) ¼" Spoon-style Shelf Pins
- (12) #8 x 1" Fh woodscrews
- (20) #6 x ¾" Fh woodscrews
- (8) #8 x 1¼" Fh woodscrews

ACCESSORY BOX

For a small project, this accessory box is full of interesting features, like curved sides, a figured panel, leather lining, and a unique, ebonized finish.

This unique accessory box combines several interesting design features. On the top of the lid, there's a panel with figured maple veneer. And for contrast, the rest of the box has been built out of walnut that has been "ebonized" — stained black.

The inside of the box is as attractive as the outside. There's a mirror on the inside of the lid, and it's "framed" with leather. Plus, leather is used to line the bottom of the box, too. There are even optional dividers for organizing jewelry.

But that's not all. The techniques that go into building this box make for an interesting project. For one thing, this isn't a traditional, square box; there are quite a few curves integrated into the design. Also, the lid pivots open on small pins, not metal folding hinges. And there's even a special procedure for finishing.

But even so, there isn't anything to building this accessory box that makes it especially difficult.

BOX

To build the box, I started with the ¾"-thick **sides (A)**, see Fig. 1. After cutting these pieces to size, the first thing I did was to carpet tape them together. This simple step makes a lot of sense for a number of reasons.

First off, when drilling the ⅛" holes for the lid's hinge pin, having the sides carpet-taped together ensures that the holes automatically end up per-

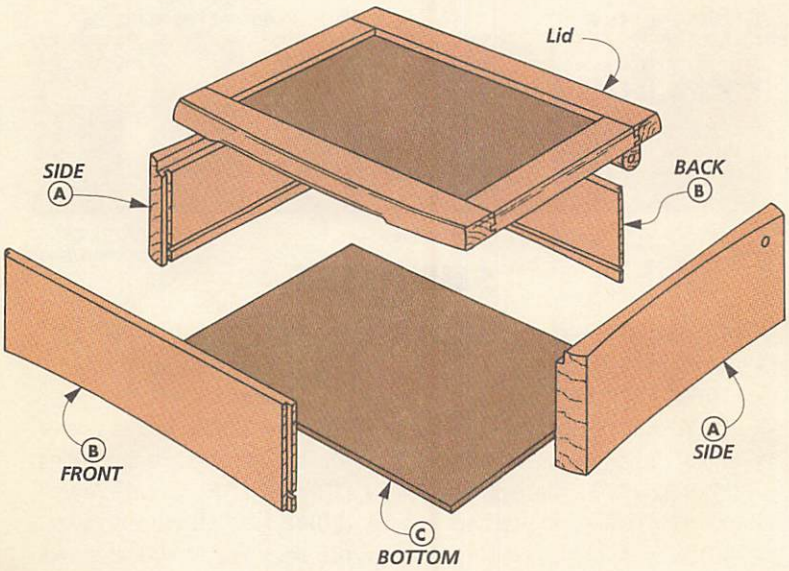

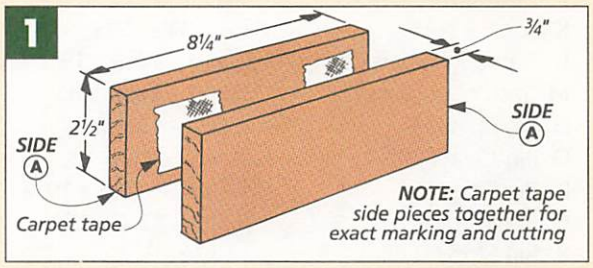

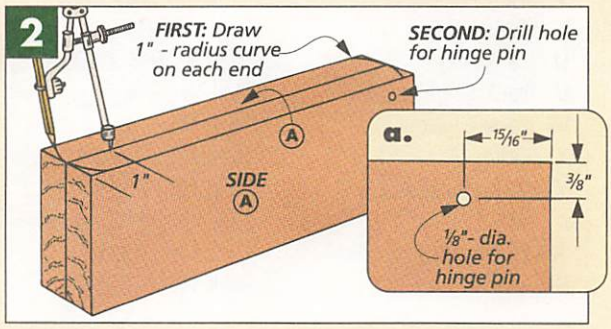

fectly aligned, see Figs. 2 and 2a.

CURVES. Then when you're laying out the curves on the side pieces, having them taped together creates a larger surface to work with. The 1" radius on each end of the side pieces can be drawn at the same time, see Fig. 2. And it's easier to lay out the long curves, too, see Fig. 3.

To draw the long curves on the sides, I made a simple template, see Fig. 3. But I intentionally cut the template longer than the side pieces. This way, the template can be used later to draw the curves on the front, back, and lid, refer to the exploded view on page 28 and the pattern above right.

When laying out the long curves, position the template so it connects with the curves on the ends, see Figs. 3 and 3a. Then cut all the curves on the band saw and sand them smooth, see Figs. 4 and 5. Here again, I found that having these pieces carpet-taped together helped to stabilize the cut.

JOINERY. Now, the two side pieces can be separated so the joinery can be cut. I routed all the joints on the router table. When working with small pieces, I like using the router table instead of the table saw. The router makes nice, clean cuts that result in dadoes and grooves with perfectly flat, square bottoms.

The first thing to do is rabbet the back, inside face of each side piece, see Fig. 6. What you end up with here is a wide rabbet that provides clearance for the lid to open.

To cut this rabbet, I used a ½" straight bit raised ¼", see Figs. 6 and 6a. But before you begin, there are a couple things you need to do to ensure a safe, square cut. First, the bit opening on the fence needs to be covered with an auxiliary fence so the piece doesn't tip into the opening.

Also, I squared up a scrap piece and used it to push the sides through the bit, see Fig. 6. This scrap piece holds the sides square to the fence, but it also backs up the cut, so there's less chance of chipout.

When routing the rabbet, I established the shoulder with the first pass, see Figs. 6 and 6a. Then I made multiple passes to remove the waste.

With the wide rabbet cut on the back end, next I cut a smaller rabbet along the top edge of the sides. This rabbet will support the lid of the box. To cut this rabbet, the height of the bit doesn't change, but you'll need to remove the auxiliary fence and reset the router fence, see Fig. 7.

CURVE TEMPLATE

NOTE: Curve template is used on box sides, front, back, and lid front

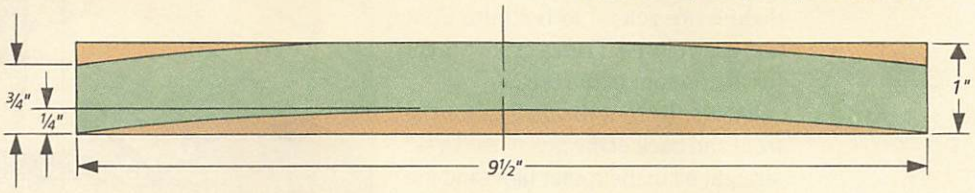

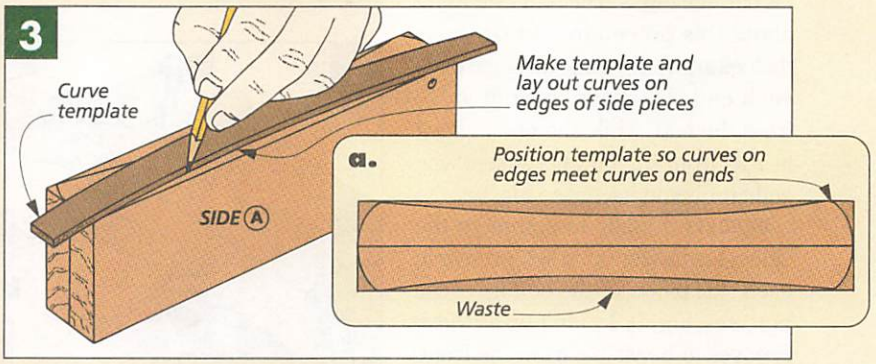

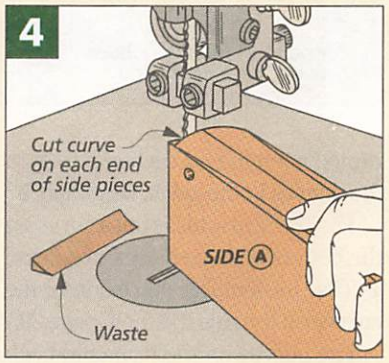

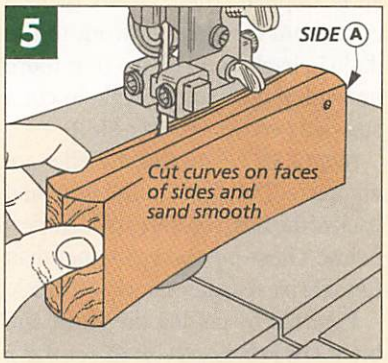

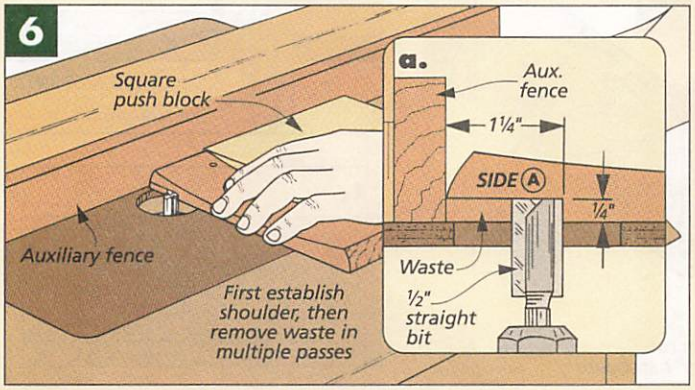

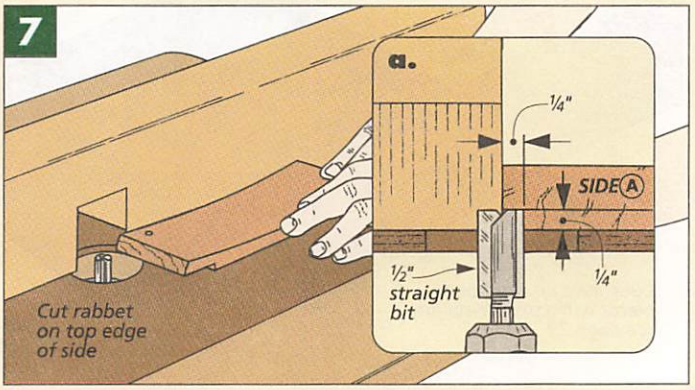

Box CONTINUED

To complete the sides of the box, there are just two more steps. First, dadoes are routed to hold the front and back pieces. Then a groove is cut for the bottom of the box.

DADOES. To rout the dadoes for the front and back of the box, I used a 1/8" straight bit in the router table and the same scrap push block I had made earlier, see Fig. 8. The only odd thing about this procedure is that these dadoes aren't the same distance from each end. The dado in front is 1/4" from the end, while the one in back is 1 3/8" from the end because of the wide rabbet in back, see Fig. 8a.

GROOVES. Finally to complete the sides, I routed a 1/8" x 1/8" groove in each side piece for the bottom of the box, see Fig. 9. I didn't want these grooves to be visible from the front, so I "stopped" them — the groove runs from the dado in front to the dado in back, see Fig. 9a. (For more on setting up a router table to cut a stopped groove, see page 18.)

FRONT & BACK. Now that the sides are complete, I worked on the front and back of the box, see the exploded view below. These pieces are thinner than the side pieces; they're only 1/4"-thick.

I started by cutting the **front** and **back (B)** to finished size (2 1/4" x 9 1/4"). Next, a groove is routed to hold the bottom, see detail 'a' below. Then I routed a tongue on each end to fit in the dadoes in the sides, see detail 'b'.

The last step is to lay out a curve on the bottom of these pieces, see detail 'c'. (Use the template you made for the curves on the sides, refer to page 29.)

The curves on the front and back pieces end at the shoulders of the tongues on the ends, see detail 'c'. And they're cut and sanded just like the curves on the sides. Just make sure the top of the curve is slightly below the groove for the bottom.

ASSEMBLY. After cutting the curves, I dry assembled the box and cut a 1/8"-thick hardboard **bottom (C)** to fit in the grooves in the box. Then the box can be glued together.

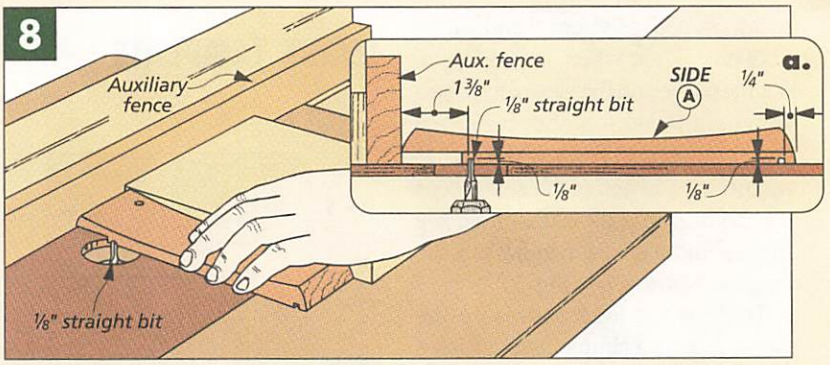

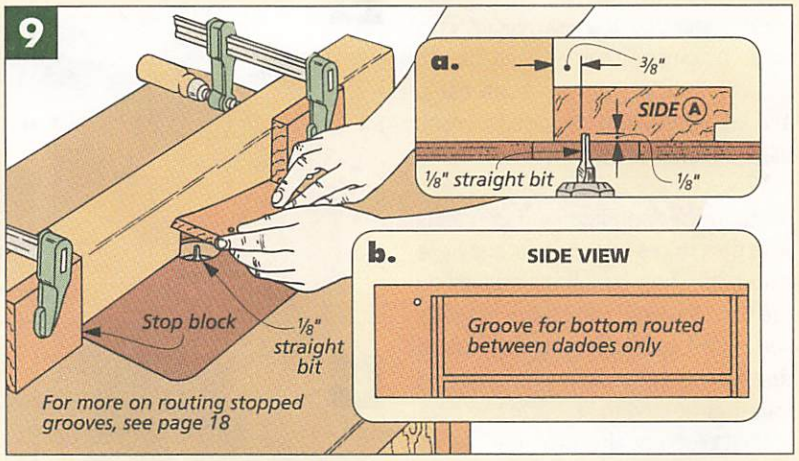

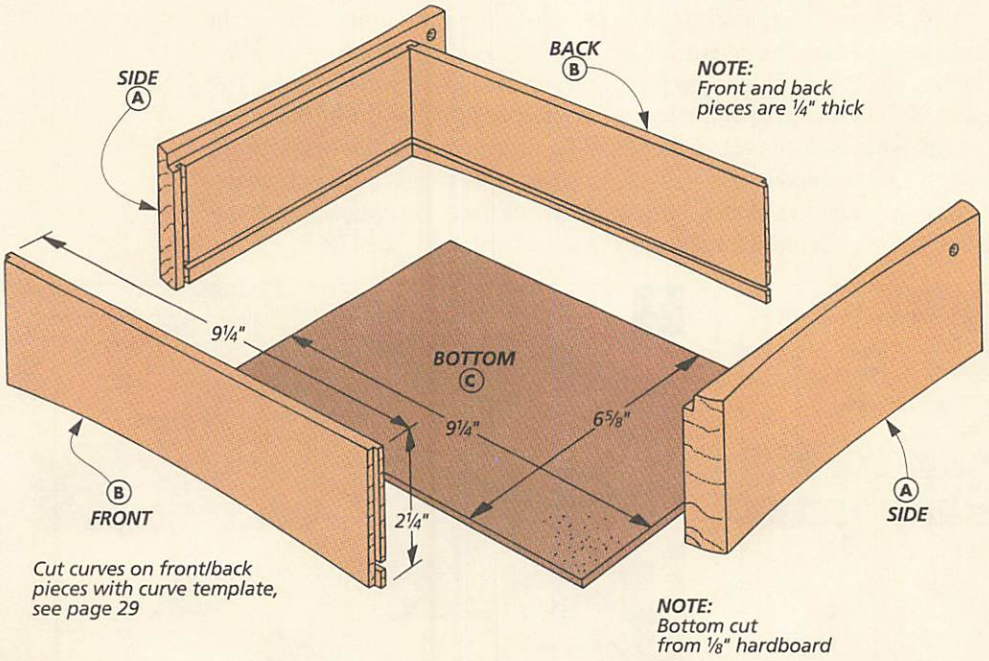

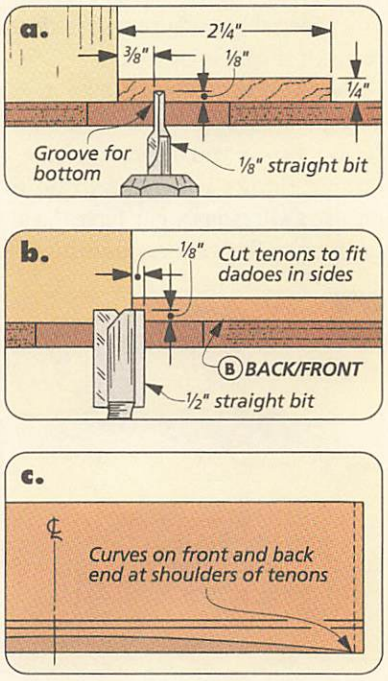

Lid

Now that the box is complete, work can begin on the veneered frame and panel lid, see drawing at right.

FRAME. To begin, I cut all the frame pieces to size, see drawing. The **front (D)**, **back (E)**, and **sides (F)** are all cut from ½"-thick stock. But the front is a little wider (1¼") so that a curve can be cut on the front of the lid.

The next step is to cut grooves for holding the ⅛" hardboard panel, see detail 'a' at right. These grooves are cut slightly off center to allow for both the veneer on the outside and the leather trim and mirror on the inside.

With the grooves cut, stub tenons can be cut on the lid's side pieces to fit the grooves in the front and back pieces, see detail 'b' at right.

CENTER PANEL. Now the frame is ready for a **center panel (G)**, see drawing. This is just a piece of ⅛" hardboard that the veneered panel, leather, and mirror will be attached to later.

To determine the panel's size, dry assemble the lid and cut the panel to fit in the grooves. Note: It's not a bad idea to drill a finger hole in the panel. Then when test-fitting the veneered panel later, it will be easier to remove it from the frame to apply the glue.

After the panel is cut to size, the lid can be assembled. But the frame of the lid is not complete quite yet. Its front edge still needs to be shaped.

First, a curve needs to be cut, see Fig. 10. To lay out this curve, you'll need to set the lid in the box. The back of the lid should be flush with the backs of the side pieces, see Fig. 10a. Then the template used earlier can be positioned so the curve ends up flush with the front of the box.

After the curve has been cut out, I rounded over the four top edges of the frame slightly, see Fig. 11. To do this, I used a ⅜" round-over bit set to make a ¼"-deep cut, see Fig. 11a.

Finally, I added a finger grip to the front edge of the lid, see Fig. 12. This can be done easily with a hand-held router and a ¼" cove bit, see Fig. 12a. The cove stops 2⅛" from each end. And it can be routed safely with the lid clamped to the edge of the bench.

At this point, the frame of the lid is complete, and now is a good time to sand it smooth. But the lid still needs to be attached to the box, so I turned my attention to adding the hinge bar.

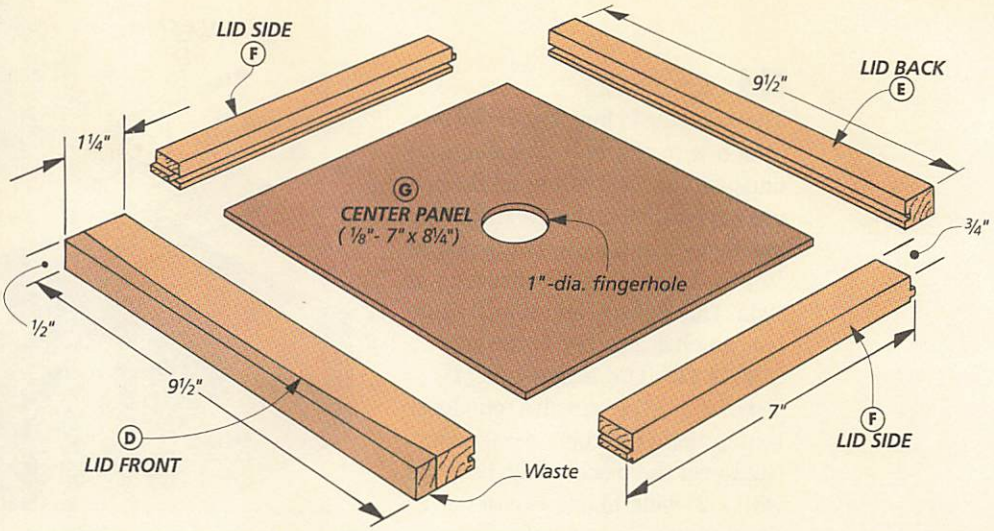

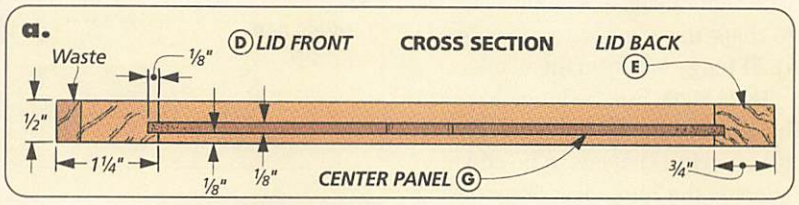

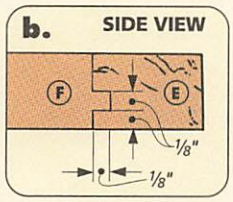

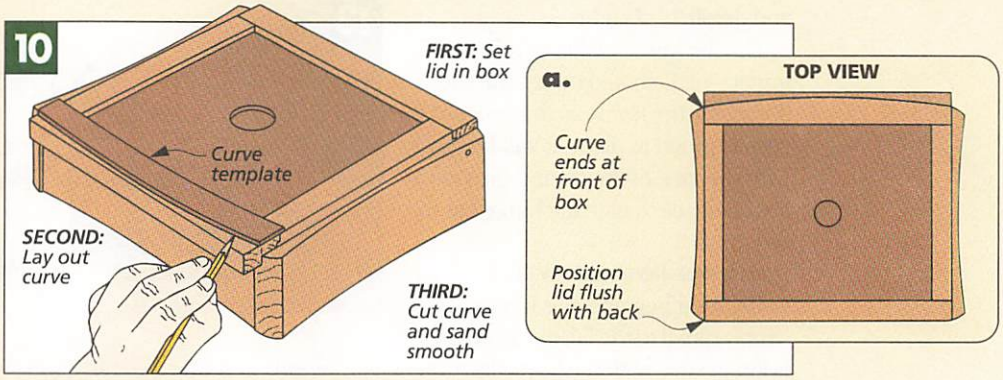

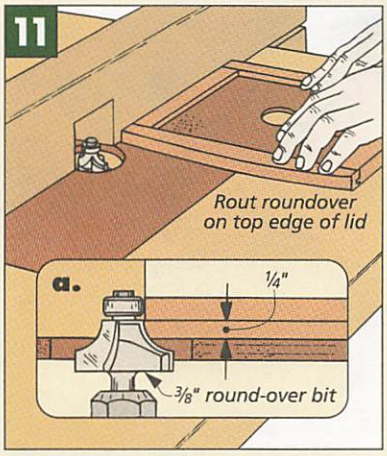

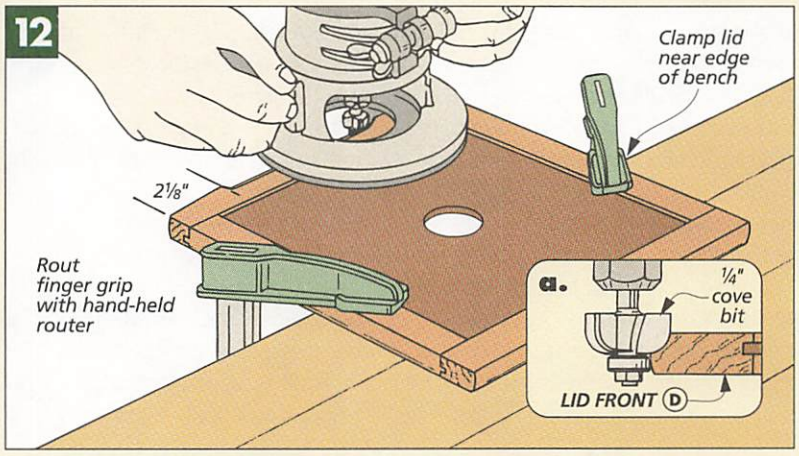

Lid CONTINUED

The next step in building the lid is to attach it to the box. What's a bit unusual here is that the lid doesn't use a typical metal hinge. Instead, it pivots open and closed on a pair of 1/8"-dia. brass pins, see drawing at right. These pins fit into a small hinge bar, which is attached to the lid.

HINGE BAR. The **hinge bar (H)** is just a 3/8" x 1/2" piece with a roundover routed along the edge, see drawing. But to cut the piece safely, I started with a 2"-wide blank, see detail 'a.' Then after using a 1/4" round-over bit to shape the edge, I ripped a 3/8"-wide (tall) hinge bar from the blank.

FILLER STRIP. But the hinge bar can't be glued to the lid quite yet. First, a **filler strip (I)** needs to be added to support the hinge bar, see drawing and detail 'b' at right.

The thickness of this strip is what's important. It should match the shoulder inside the frame so that when the strip is glued in place, it will be flush with the face of the lid and provide a level surface to glue the hinge bar to, see detail 'b'.

ATTACHING HINGE BAR. With the filler strip glued in place, the hinge bar is simply glued to the lid, but its position is important. With the lid in place, the bar should be 1/16" from the back (E) of the box, see detail 'b'.

FINISHING. In order to get into all the recesses of the box and lid, I finished them before the lid is attached. This is a two-step process. First, I stained the wood, see box below. Then I applied a few coats of a wipe-on finish.

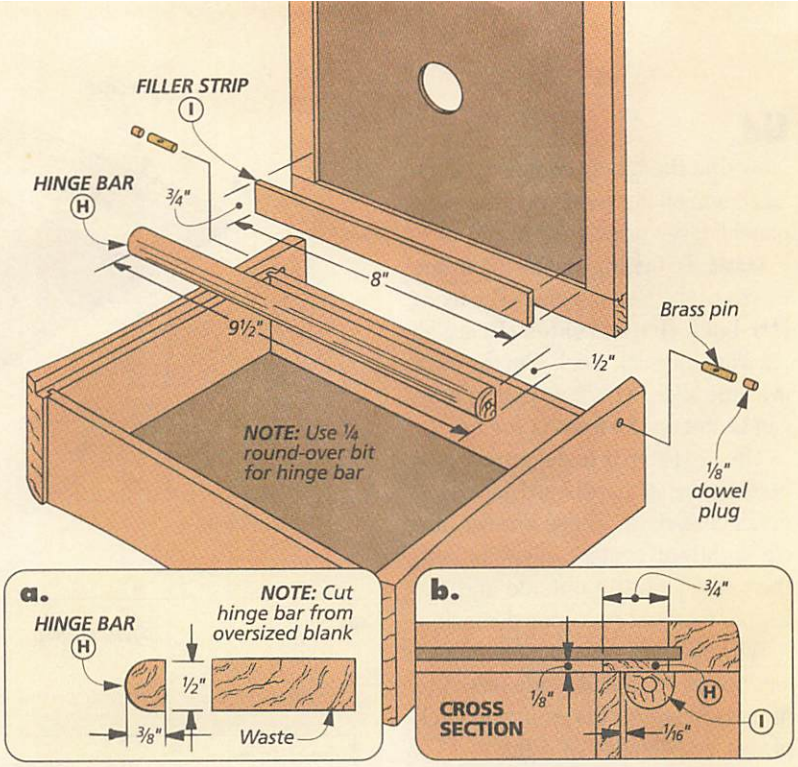

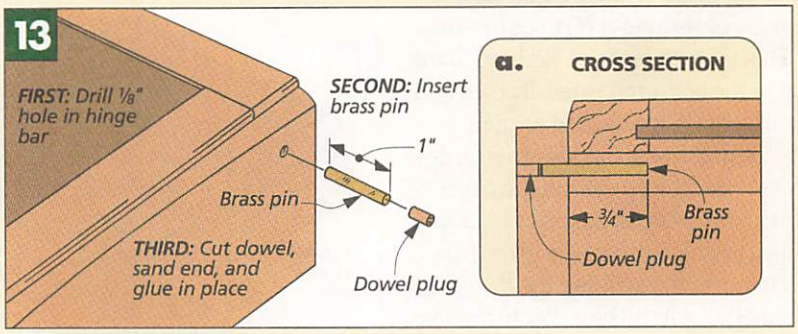

ATTACHING THE LID. Now, you can attach the lid to the box. The first step is to drill a 1/8" hole in the hinge bar for the pin, see Fig. 13. To do this, I set the lid in place and used the hole in the box sides to guide the bit. The goal is to drill a hole in the bar that's 3/4" deep, see Fig. 13a.

The lid pivots on two 1/8"-dia. brass pins cut 1" long, see Fig. 13. Then the hole is plugged with a short length of 1/8"-dia. dowel. But if you cut and trim

EBONIZING WOOD

I wanted this box to look like ebony without actually using ebony to build it. For one thing, ebony is an exotic wood that's not readily available. But it's also expensive and difficult to work with. So I did what many woodworkers have traditionally done — I "ebonized" the box.

When I'm going to ebonize a project, I start with a dark-colored wood. (I used walnut.) You can ebonize any wood, but a darker wood gets black more quickly.

The process of ebonizing is as easy as applying a stain. I mix up a fairly concentrated black aniline dye. I like to use a water-based dye because it's the easiest to work with and the most lightfast. But because you're putting water on the wood, you need to raise the grain first. This is done by wetting the surface of the wood and then when it's dry, lightly sanding back the raised "whiskers."

I mixed three teaspoons of dye in a quart of hot water. Then I brushed a heavy coat on the wood and let it set. Since the idea is to get the wood as dark as possible, I don't bother to wipe off the excess. In fact, you may want to apply a couple coats. When it's dry, simply apply a finish.

▲ *I wanted the mirror box to look like it was made out of ebony. So first, I used walnut to make the box. Then I applied a couple coats of a water-based, concentrated, black aniline dye.*

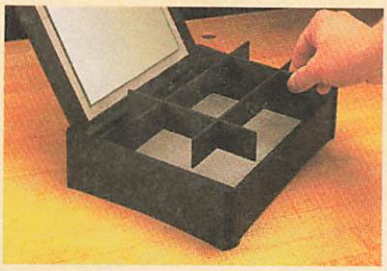

▲ *After gluing the leather into the box, I built this optional divider grid and set it in place.*

the plugs after you glue them in, you will mar the finish already on the box.

So instead, simply cut the plug so you can push it in flush with the surface. Then sand the end smooth and push it in place. Finally, a little "spot finishing" is all that's needed.

VENEERED PANEL. Now the lid is ready for the veneer, see drawing at right. I glued a piece of bird's eye maple to a 1/8" hardboard **backing (J)**, with contact cement, see detail 'a.' (Both the veneer and backing are oversize at this point.) Then after the veneer was glued on, I trimmed the panel to fit the opening in the lid, finished it, and used yellow glue to hold it in place.

LEATHER & MIRROR. The next thing to add is the leather lining, see drawing above. I lined the inside of the box and lid with leather. Plus, I covered the hardboard underside of the box with leather, too.

The leather pieces for the box are simply cut to size and glued in place. (For more on cutting and gluing the leather, see page 19.)

But for the leather that's glued into the lid, I cut an opening in the center so it looks like a 1"-wide frame, see drawing. That's because I added a 5" x 7" mirror and wanted to attach the mirror directly to the center panel (G). (I used silicone sealant to do this.)

DIVIDERS. The last thing to do is add dividers inside the box for organizing your accessories, see photo above.

There are four interlocking pieces here: two **short dividers (K)** and two **long dividers (L)**, see Fig. 14. These pieces are all 1/8" thick and 1 1/4" tall. Only their lengths are different.

To join the dividers, I cut a pair notches in each piece, see Figs. 14a and b. Then, I finished them the same as the box, "locked" them together, and set them in the box. W

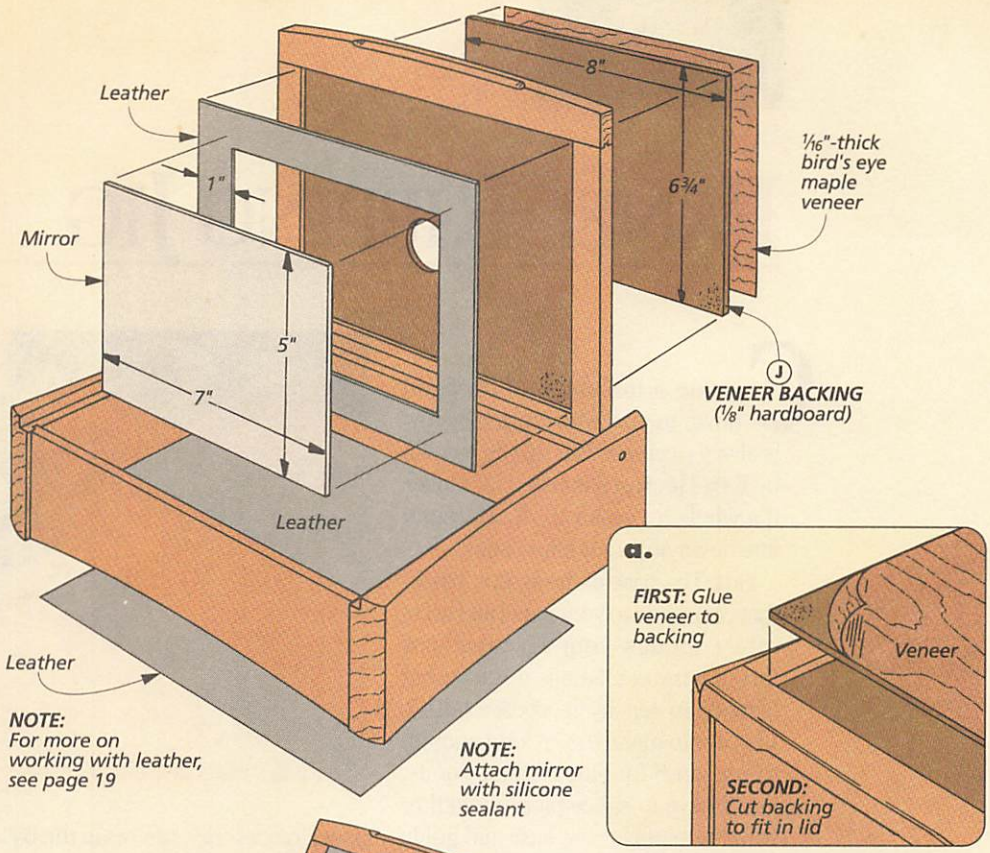

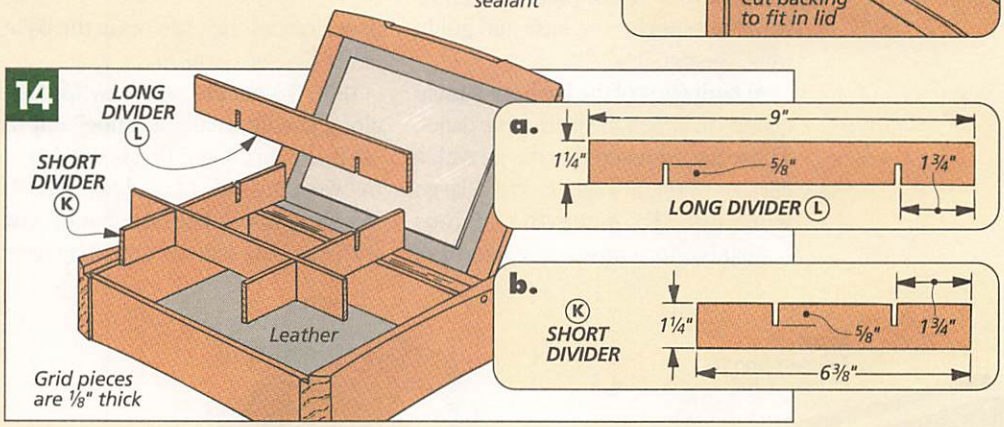

MATERIALS & SUPPLIES

Box		
A Sides (2)	3/4 x 2 1/2 - 8 1/4	
B Front/Back (2)	1/4 x 2 1/4 - 9 1/4	
C Bottom (1)	1/8 Hdbd. - 6 5/8 x 9 1/4	
Lid		
D Front (1)	1/2 x 1 1/4 - 9 1/2	
E Back (1)	1/2 x 3/4 - 9 1/2	
F Sides (2)	1/2 x 3/4 - 7	
G Center Panel (1)	1/8 Hdbd. - 7 x 8 1/4	
H Hinge Bar (1)	1/2 x 2 (rgh). - 9 1/2	
I Filler Strip (1)	1/8 x 3/4 - 8	
J Veneer Backing (1)	1/8 Hdbd. - 6 3/4 x 8	
Dividers		
K Short Dividers (2)	1/8 x 1 1/4 - 6 3/8	
L Long Dividers (2)	1/8 x 1 1/4 - 9	

- (3) 7" x 10" Leather (rgh).
- (1) 5" x 7" Mirror
- (1) 8" x 9" Figured Veneer (rgh).
- (1) 1/8"-dia. x 3" (rgh). Brass Rod

CUTTING DIAGRAM

3/4" x 5" - 48" Walnut (1.67 Bd. Ft.)

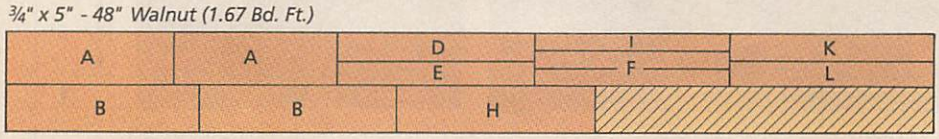

PANEL RIPPING JIG

Cutting a full sheet of plywood down to size with a circular saw is always a chore. But this jig, sent in by **Ken Heck** of San Jose, CA, makes it a whole lot easier to rip a straight line down an 8 foot-long panel.

BASE. The base of the jig is a "track" that clamps on to your panel and accurately guides your circular saw through the cut. I made this base out of medium density fiberboard (MDF). In order to make the jig long enough to use on 8 foot-long sheet goods, you'll have to splice pieces together with lap joints for the base and guide rails, see detail 'a'.

At both ends of the base are simple clamps to attach the jig to your panel. These are connected to the jig with a carriage bolt, a washer, and a large wing nut. To make the clamps adjustable for cutting any length of panel, cut a series of slots in the base of the jig, see detail 'b'.

SHOE. To enable your saw to slide along the jig, make a "shoe" out of 1/4"-thick hardboard that is sized to fit between the rails of the base. Attach the shoe to the bottom of your saw with machine screws. (You may have to drill and tap screw holes on the bottom of your saw.) Then use your saw to trim off both edges of the base, see detail 'c'.

To use the jig, simply align the edge of the jig with your layout line, adjust and tighten the clamps, and slide the saw down the track, see photo.

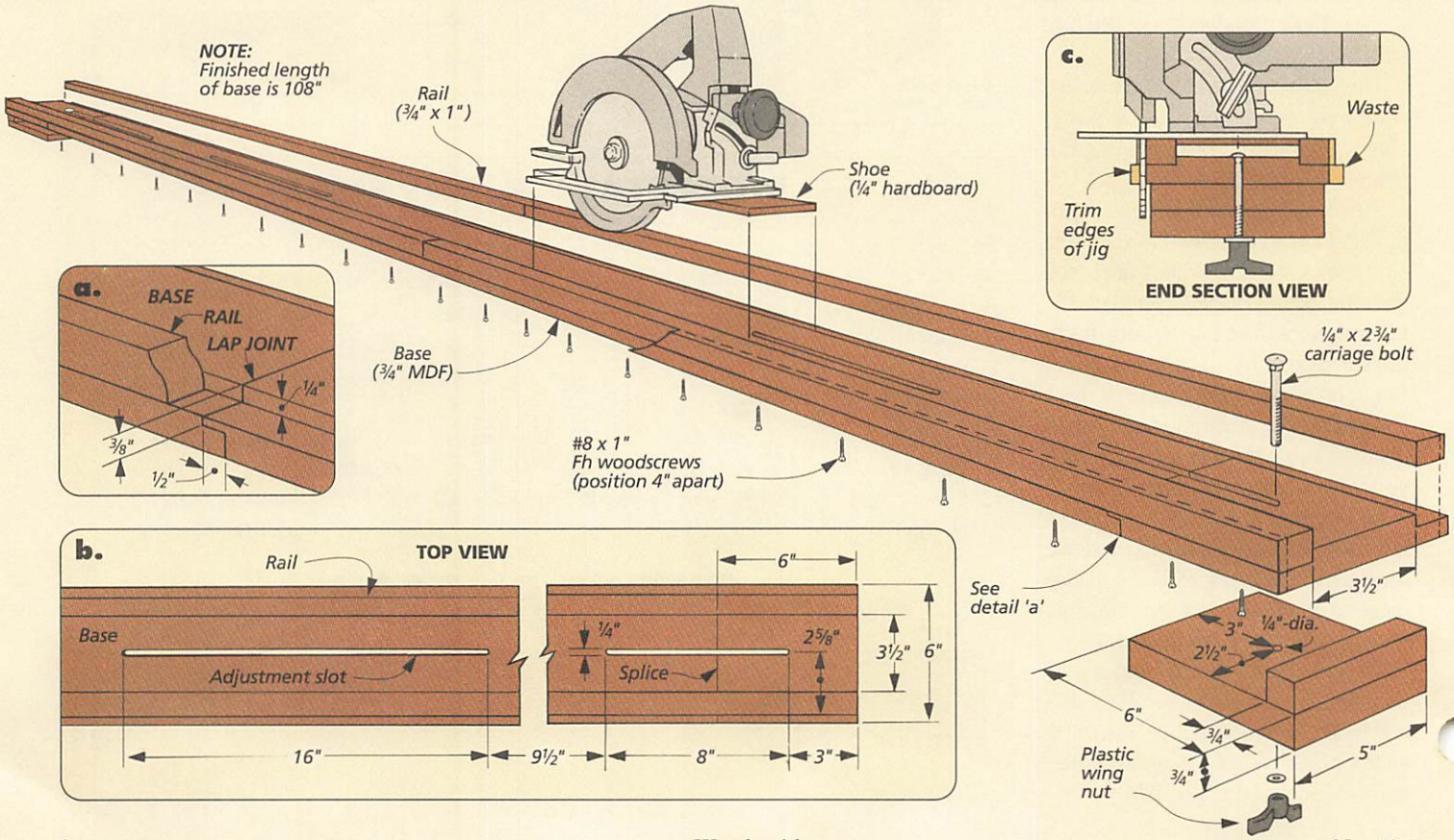

SOURCES

Woodsmith Project Supplies offers hardware kits and supplies for some of the projects shown in this issue. Supplies for these projects are also available at your local hardware store or through the mail-order sources at right.

DISPLAY CASE

The display case on page 6 doesn't require much hardware. A 5/8"-dia. knob is the only brass hardware you need, and you should be able to find one at a hardware store. (Note: As an option to the carved medallion on the drawer front, you can substitute a drawer pull. The one shown on page 9 is a 3" bail-style pull.)

Besides the knob, you'll also need a few other supplies. For the top, we used 1/4"-thick glass with a 1"-wide bevel. (Our piece was 12 7/8" x 12 7/8" overall.) You'll need to order this from a local glass shop. Note: It's a good idea to get the glass before making the case.

Also, to line the inside of the drawer, we used 1/2"-thick plywood that was wrapped with polyester batting and fabric. (To secure the fabric, we used staples.)

PROFILE ROUTER BIT. To rout the decorative edge around the frames of the display case, we used a special profile bit. It's made by Freud and is called a "Table Top Classical Bold Bit" (99-011), see the source at right.

CARVING TOOLS. To carve the medallion on the drawer front, you'll need a few carving tools. The ones we found most helpful were a skew chisel, a round nose chisel, and a V-groove chisel. Many woodworking catalogs sell these chisels individually or in sets, see the sources at right.

COOKBOOK RACK

To build the cookbook rack on page 14, all you need are the following:

(1) 1"-dia. Wood Knob w/screw
(4) 3/4"-dia. Button Plugs
(4) 3/8"-dia. End Grain Plugs
(15) #6 x 1 1/4" Fh Woodscrews

This or similar hardware is available locally or through the sources listed at right.

TABLE SAW STAND

The table saw stand on page 20 requires quite a bit of hardware. And even though none of the hardware is too unusual, rounding it all up can be a task. So *Woodsmith Project Supplies* is currently offering a kit for this stand. Included in the kit are all the woodscrews, washers, nuts, and bolts you need to build the project, plus:

(4) 3" Swivel Brake Casters (270 lb. load capacity)
(2 pair) 3" x 3" Hinges
(4) 1/4" Shelf Pins

70107-100 Table Saw Stand Hardware Kit $77.95

Note: Similar hardware is available at most hardware stores. See page 27 for a complete hardware list.

ACCESSORY BOX

The supplies you'll need to build the accessory box on page 28 aren't what I would call "traditional" hardware.

To attach the lid to the box, I used two 1/8"-dia. pins that were cut 1"-long. (And I plugged the pin holes with 1/8" dowels.)

For the outside of the lid, I started with an 8" x 9" piece of figured veneer. (I used bird's eye maple.) This is available from the sources listed at right.

Then on the inside of the lid and the inside and underside of the box, I used suede leather as lining. (You'll need three pieces 7" x 10".) To find the leather, you'll need to look for a leather store or possibly a fabric store near you.

Note: To attach the leather, I found that liquid hide glue worked better than yellow glue, see the sources at right.

On the inside of the lid, I also added a 5" x 7" mirror. It's secured to the lid with silicone sealant.

And finally, to ebonize the lid and box, I used a water-soluble black aniline dye. (1 oz. will make one quart, which is more than enough for this project.) See the sources at right.

MAIL ORDER SOURCES

Similar project supplies and hardware may be ordered from the following companies:

Woodcraft
800-225-1153
Display case knob and bail-style pull, Carving tools, Cookbook rack hardware, Hide glue, Aniline dye

Woodsmith Store
800-835-5084
Display case knob and bail-style pull, Carving tools, Cookbook rack hardware, Table saw stand hardware, Hide glue,

Woodworkers' Store
800-279-4441
Display case knob and bail-style pull, Carving tools, Cookbook rack hardware, Veneer, Hide glue, Aniline dye

Woodworker's Supply
800-645-9292
Carving tools, Freud router bit, Aniline dye

WOODSMITH PROJECT SUPPLIES

To order a hardware kit from *Woodsmith Project Supplies* or for a copy of our *WoodsmithShop* catalog, use our Toll Free order line. It's open Monday through Friday, from 7 AM to 7 PM Central Time.

Before calling, please have your VISA, MasterCard, or Discover Card ready.

If you would like to mail your order in, call the number below for more information concerning shipping charges as well as any applicable sales tax.

1-800-444-7527

Note: Prices subject to change after December 1996

WoodNet™ **NOW ON THE WEB!**

- 50 Woodworking Tips Online
- Woodworking Techniques — Step-by-Step
- Project Plans You Can Download
- WoodNet Forum — Woodworkers' Q & A
- Power Tool Reviews
- Links to Other Woodworking Sites
- Coming Soon: Online Back Issue Database

Point your browser to:

http://www.augusthome.com

Select "Woodworking" from the Welcome Page menu.

FINAL DETAILS

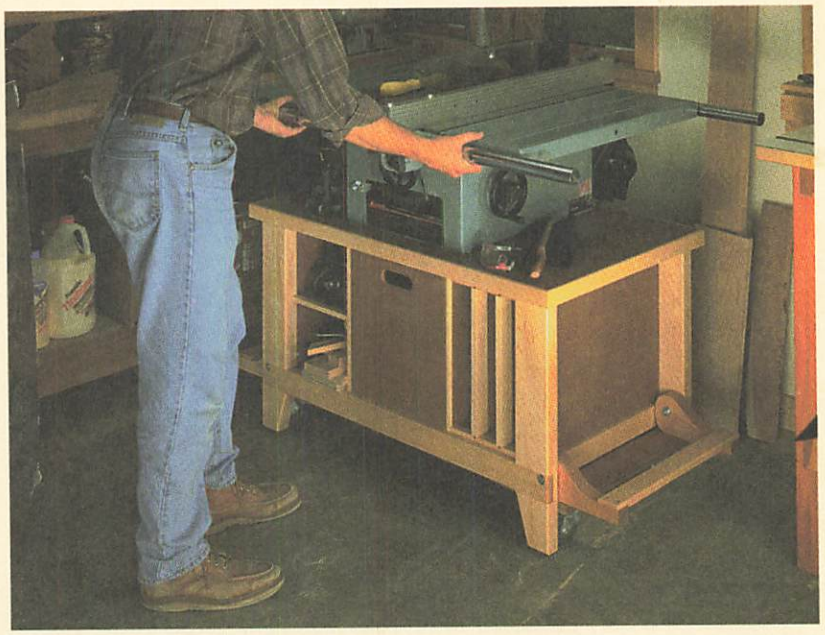

◄ ***Table Saw Stand.*** *This mobile saw stand features a unique cam-activated caster system. So you can easily roll it out of the way. And there's plenty of storage for all of your saw accessories. For step-by-step instructions, see page 20.*

▲ **Cookbook Rack.** *This easy-to-build, weekend project features two storage areas for cookbooks. Plus a drawer to hold recipe cards. See page 14 for step-by-step plans.*

◄ ***Accessory Box.*** *Ebonized walnut and leather trim are just two of the unique details that make up this small accessory box. For more on building this project, see page 28.*

◄ ***Display Case.*** *A hand-carved drawer front and a beveled glass top make this traditional walnut display case a real heirloom. Plans begin on page 6.*